Parts and Repair Kits

016647-45

TAG:

ChekPoint™ *Sensor Faucet Control Module*

Architect/Engineering Specifications:

ChekPoint sensor faucet control module with blue module housing, internal flow control setting switches for adjusting auto time out & shut off delay settings, optional auto flush feature flows water for 30 seconds after every 12 inactive hours, mechanical temperature mixing valve w/ intergral check valves and hardwire capable using terminals on back . Certified to NSF 61-Section 9 and NSF 372

Job Name_____
Model Specified_____Quantity_____
Variations Specified_____
Date_____

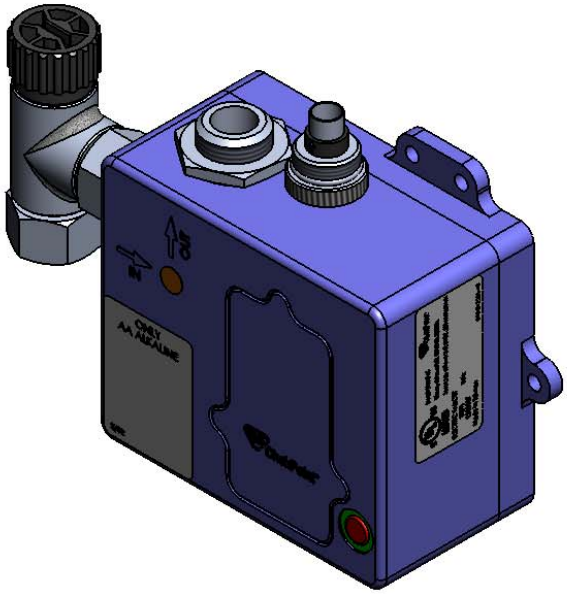

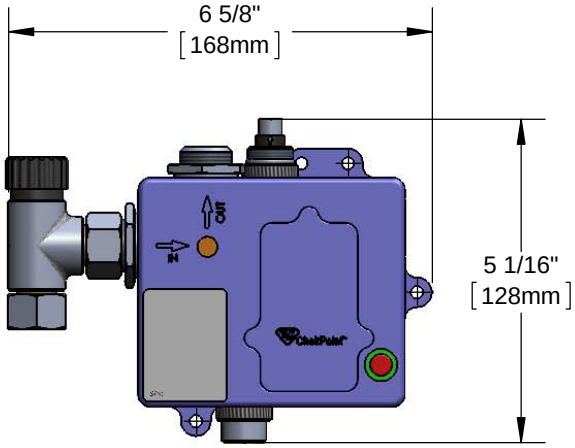

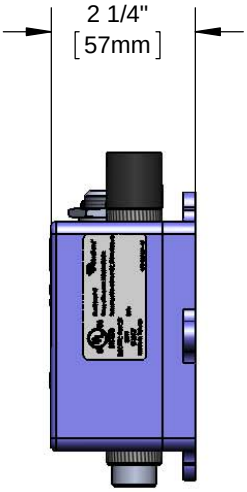

Features & Benefits:

- ChekPoint sensor faucet control module w/ blue module housing
- Internal flow control setting switches for adjusting auto time out & shut off delay settings
- Optional auto flush feature flows water for 30 seconds after every 12 inactive hours
- Hardwire capable using terminals on back

Product Compliance:

- UL 1951
- NSF 61 - Section 9
- NSF 372 (Low Lead Content)

Warranty: Three Year (Limited)

Performance Data:

- Pressure: 20 - 125 psi
- Temperature: 40°F - 140°F

T&S BRASS AND BRONZE WORKS, INC.
• 2 Saddleback Cove • Travelers Rest, SC 29690
Ph 800-476-4103 • Fax 864-834-3518
• Simi Valley, CA • Ph 800-423-0150 • www.tsbrass.com

Date: 12/21/15