Parts & Repair Kits

002832-40

TAG:

Pre-Rinse Mixing Faucet

Architect/Engineering Specifications:

8” wall mount mixing faucet with polished chrome plated brass body, swivel outlet (less nozzle), compression cartridges with spring checks, lever handles and 1/2” NPT female inlets. Certified to ASME A112.18.1/CSA B125.1, NSF 61-Section 9 and NSF 372. Meets ADA ANSI/ICC A117.1 requirements.

Job Name_____
Model Specified_____Quantity_____
Variations Specified_____
Date_____

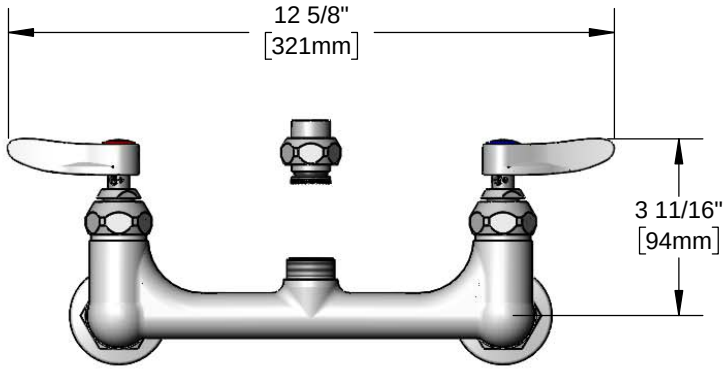

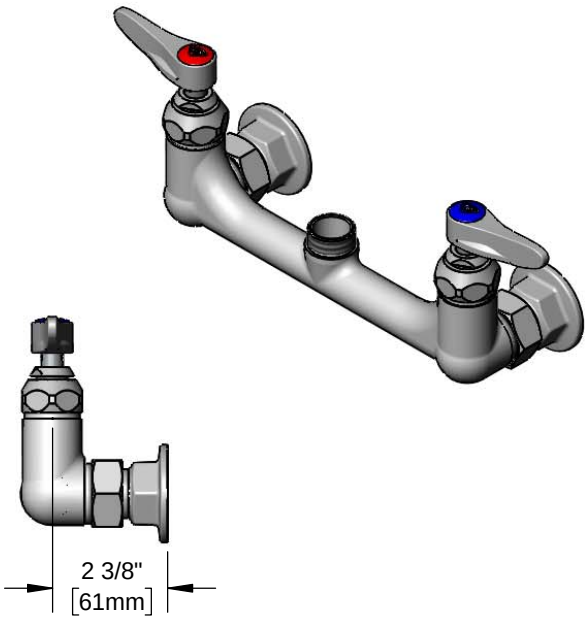

Features & Benefits:

- 8” wall mount mixing faucet with polished chrome plated brass body
- Swivel outlet accepts T&S swing nozzles and EasyInstall risers
- Includes EZ-K kit to convert rigid risers to EasyInstall
- Quarter-turn Eterna compression cartridges with spring checks to prevent cross flow of water
- Lever handle w/ color coded indexes
- 1/2” NPT female eccentric inlets w/ Ø 2” flanges
- Adjustable centers from 7 3/4” to 8 1/4”
- Material: Polished chrome plated brass body and chrome plated metal handles

Product Compliance:

- ASME A112.18.1 / CSA B125.1
- NSF 61 - Section 9
- NSF 372 (Low Lead Content)
- ANSI A117.1 (ADA)

Warranty: One Year (Limited)

Performance Data:

- Pressure: 20 - 125 psi
- Temperature: 40˚F - 140˚F
- Flow Rate: 28.63 GPM @ 60 psi

(Outlet Device &/or Final Configuration May Reduce Flow Rate)

ADA Compliant

Optional Handles

☐ 4" Wrist Action
☐ Lever (Standard)
☐ 4-Arm

Optional Cartridges

☐ Quarter-Turn Cerama w/ Check Valves
☐ Quarter-Turn Eterna w/ Spring Checks (Standard)

T&S BRASS AND BRONZE WORKS, INC.
• 2 Saddleback Cove • Travelers Rest, SC 29690
Ph 800-476-4103 • Fax 864-834-3518
• Simi Valley, CA • Ph 800-423-0150 • www.tsbrass.com

Date: 04/17/17