Pre-Rinse Units

5PR-8W10

TAG:

Pre-Rinse Unit

Architect/Engineering Specifications:

8" wall mount mixing faucet with polished chrome plated brass body, add-on faucet with ceramic cartridge and lever handle, 10" swing nozzle with laminar flow device, 18” riser, 44” flexible stainless steel hose with heat resistant handle, 1.42 GPM spray valve, ceramic cartridges, lever handles, in-line check valves, 1/2" NPT female inlets, 6” adjustable wall bracket, spray valve holder and overhead spring. Certified to ASME A112.18.1/CSA B125.1, NSF 61-Section 9 and NSF 372. EPAct 2005 compliant.

Job Name_____
Model Specified_____Quantity_____
Variations Specified_____
Date_____

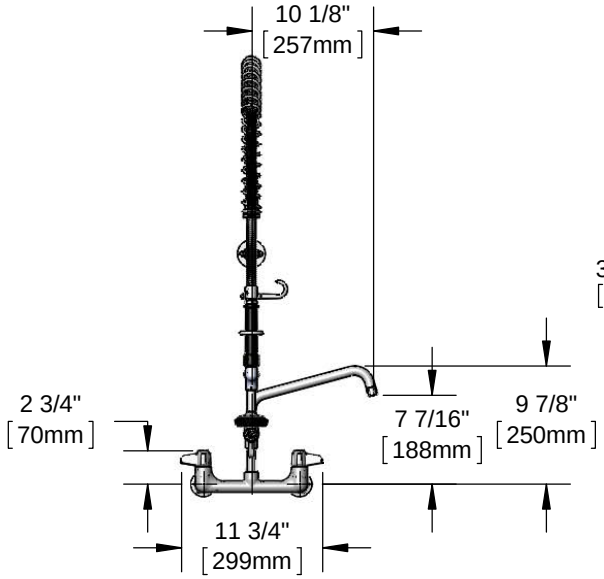

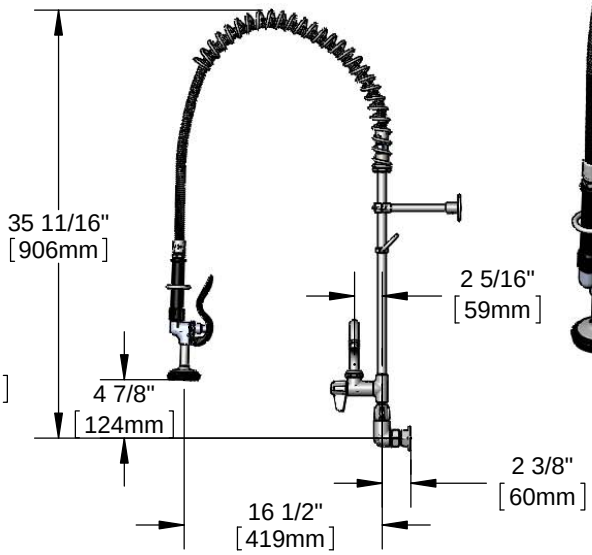

Features & Benefits:

- 8" wall mount mixing faucet w/ polished chrome plated brass body
- Add-on faucet w/ polished chrome plated brass body
- 10” swing nozzle w/ laminar flow device
- 18” rigid riser
- 44” flexible stainless steel hose w/ heat resistant black handle and hold down ring
- 1.42 GPM spray valve
- Quarter-turn ceramic cartridges
- Lever handles w/ color coded screws
- 1/2" BSPP check valves
- 1/2" NPT female eccentric inlets with ∅2" flanges
- Adjustable centers 7 3/4" to 8 1/4"
- 6” adjustable wall bracket
- Material: Polished chrome plated brass body & tubular nozzle, add-on faucet body, riser & spray valve, stainless steel hose and chrome plated metal handles

Product Compliance:

- ASME A112.18.1 / CSA B125.1
- NSF 61 - Section 9
- NSF 372 (Low Lead Content)
- EPAct 2005 (PRSV)

Warranty: One Year (Limited)

Performance Data:

- Pressure: 20 - 125 psi
- Temperature: 40°F - 140°F
- Flow Rate:
  - Spray Valve: 1.42 GPM @ 60 psi
  - Add-On Faucet: 4.62 GPM @ 60 psi