Electronic Faucets

TAG:

EC-3130-ST-VF05

ChekPoint™ *Electronic Sensor Faucet*

Architect/Engineering Specifications:

Single hole single temperature deck mount electronic sensor faucet with polished chrome plated brass body and swivel/rigid gooseneck, 0.5 GPM vandal resistant non-aerated spray device, above deck electronic AC/DC control module with internal flow control setting switches, anti-rotation pin, 19” flexible stainless steel supply hose and check valve adapter with 3/8" compression connection. Certified to ASME A112.18.1/CSA B125.1, NSF 61-Section 9, NSF 372, and UL 1951. Meets ADA ANSI/ICC A117.1 requirements.

Job Name_____
Model Specified_____Quantity_____
Variations Specified_____
Date_____

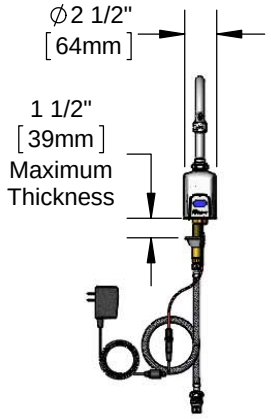

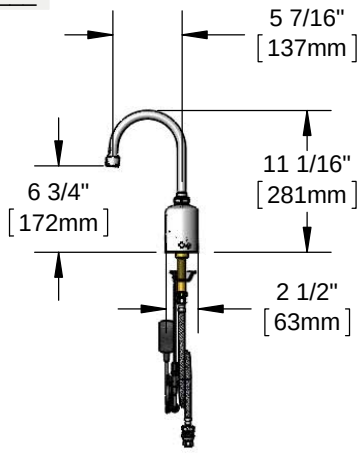

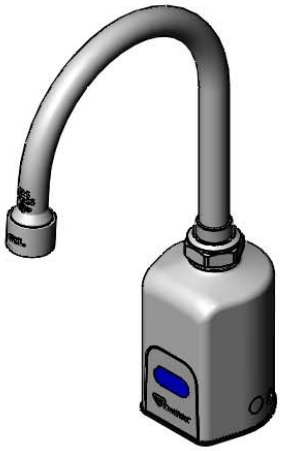

Features & Benefits:

- Single hole single temperature deck mount faucet w/ polished chrome plated brass body
- Swivel/rigid gooseneck w/ 0.5 GPM vandal resistant non-aerated spray device, Series 6 (B-0199-06-N05)
- Above deck electronic control module w/ internal flow control switches for adjusting auto time out & shut off delay settings
- Optional auto flush feature flows water for 30 seconds after every 12 inactive hours
- Plug in AC transformer or 6 VDC lithium battery (DC) power options
- Anti-rotation pin
- 19” flexible stainless steel supply hose with filter washer
- Check valve adapter with 3/8" compression connection
- Low battery LED indicator light
- Material: Polished chrome plated brass body & tubular spout

Product Compliance:

- ASME A112.18.1 / CSA B125.1
- NSF 61 - Section 9
- NSF 372 (Low Lead Content)
- ANSI A117.1 (ADA)
- UL 1951

Warranty: Three Year (Limited)

Performance Data:

- Pressure: 20 - 125 psi
- Temperature: 40°F - 140°F
- Flow Rate: 0.5 GPM @ 60 psi
- Water Consumption: @ 10 sec = .08 gal
  @ 15 sec = .13 gal

ADA Compliant

Optional Outlets (Series 1 / VR Series 6)

GPM	Aerated	Non-Aerated (Laminar)	VR Aerated	VR Non-Aerated (VR Laminar)
0.35	N/A	☐ B-0199-01-N035	N/A	☐ B-0199-06-N035
0.5	N/A	☐ B-0199-01-N05	N/A	Standard
1.0	☐ B-0199-01-F10	N/A	☐ B-0199-06-F10	N/A
1.5	☐ B-0199-01-WS	☐ B-0199-29	☐ B-0199-06-WS	☐ B-0199-29VR
2.2	☐ B-0199-01	☐ B-0199-21	☐ B-0199-06	☐ B-0199-21-VRF

T&S BRASS AND BRONZE WORKS, INC.
• 2 Saddleback Cove • Travelers Rest, SC 29690
Ph 800-476-4103 • Fax 864-834-3518
• Simi Valley, CA • Ph 800-423-0150 • www.tsbrass.com

Date: 08/26/16