Laboratory Products

BL-5850-01

TAG:

Single Self-Closing Ledge Faucet

Architect/Engineering Specifications:

Single hole single temperature deck mount faucet with polished chrome plated brass body, 5 5/8” rigid gooseneck with serrated tip outlet, fast self-closing cartridge, 4-arm handle and 1/2” NPSM male inlet. Certified to ASME A112.18.1 / CSA B125.1, NSF 61-Section 9 and NSF 372.

Job Name_____
Model Specified_____Quantity_____
Variations Specified_____
Date_____

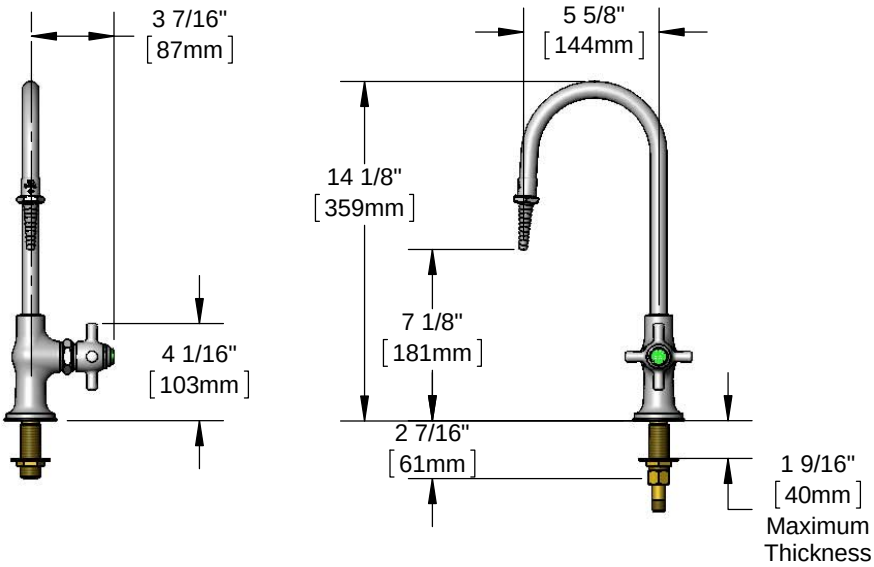

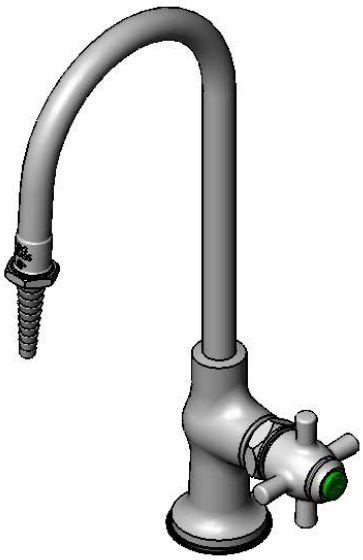

Features & Benefits:

- Single hole single temperature deck mount faucet w/ polished chrome plated brass body
- 5 5/8” rigid gooseneck
- Serrated tip outlet, Series 2
- Fast self-closing cartridge
- 4-arm handle w/ green "CW" index
- 1/2” NPSM male inlet
- Optional tailpiece and nut for 1/4” NPT male connection
- Material: Polished chrome plated brass body & tubular spout and handle

Product Compliance:

- ASME A112.18.1 / CSA B125.1
- NSF 61 - Section 9
- NSF 372 (Low Lead Content)

Warranty: One Year (Limited)

Performance Data:

- Pressure: 20 - 125 psi
- Temperature: 40°F - 140°F
- Flow Rate: 3.78 GPM @ 60 psi

T&S BRASS AND BRONZE WORKS, INC.
• 2 Saddleback Cove • Travelers Rest, SC 29690
Ph 800-476-4103 • Fax 864-834-3518
• Simi Valley, CA • Ph 800-423-0150 • www.tsbrass.com

Date: 12/16/16