Stainless Steel Retractable Hose Reels

TAG:

B-7133-02

Open Stainless Steel Hose Reel

Architect/Engineering Specifications:

Open stainless steel hose reel, stainless steel rear trigger water gun with 5/16" orifice and 1/2" NPT male inlet, 1/2" x 35' heavy-duty non-marking hose, ratcheting system, multi-fit bracket, adjustable hose bumper and 1/2" NPT female inlet.

Job Name_____
Model Specified_____Quantity_____
Variations Specified_____
Date_____

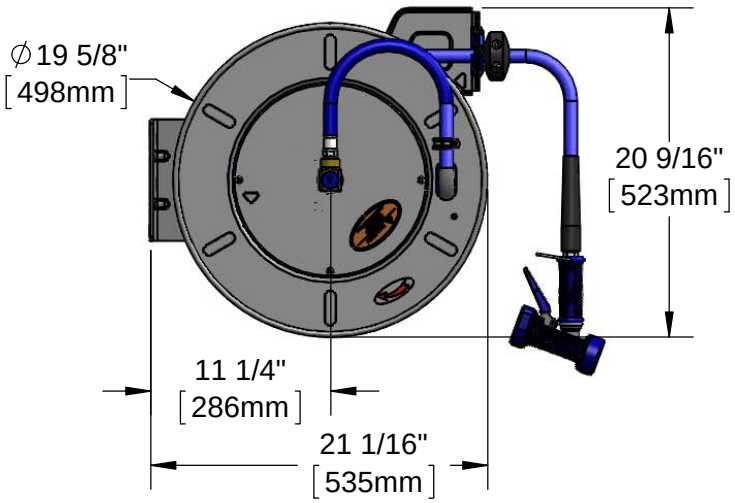

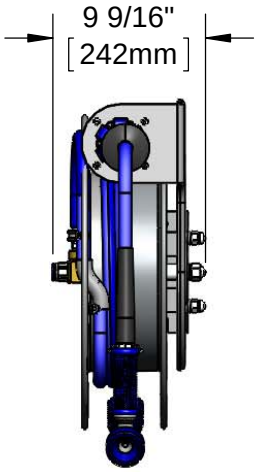

Features & Benefits:

- Open stainless steel hose reel
- Stainless steel rear trigger water gun with 5/16" orifice and 1/2" NPT male inlet
- 1/2" x 35' heavy-duty non-marking hose rated to 300 PSI
- Ratcheting system holds the length of hose until a slight tug to retract automatically
- 1/2" NPT female inlet
- Adjustable hose bumper
- Multi-fit bracket for wall, ceiling or under counter mounting
- Material: Stainless steel open reel, water gun and wall bracket

Product Compliance:

- NSF 61 Exempt (Non-Potable)

Warranty: Two Year (Limited)
- Hose: One Year (Limited)

Performance Data:

- Pressure: 20 - 125 psi
- Temperature: 40°F - 200°F
- Flow Rate: 5.20 GPM @ 60 psi

Optional Hose Reel Spray Valves

- ☐ MV-2516-24 Stainless Steel Rear Trigger Water Gun (Standard)
- ☐ MV-2522-24 Stainless Steel Front Trigger Water Gun
- ☐ EB-0107 High Flow Spray Valve

Optional Hose Reel Multi-Fit Brackets
1/4", 3/8", & 1/2" Stainless Steel Hose Reel

- ☐ G016737-45 Stainless Steel Wall Swing Bracket
- ☐ G016652-45 Deck Mount Pivot Bracket
- ☐ G018477-45 Stainless Steel Table Leg Swing Bracket

T&S BRASS AND BRONZE WORKS, INC.
• 2 Saddleback Cove • Travelers Rest, SC 29690
Ph 800-476-4103 • Fax 864-834-3518
• Simi Valley, CA • Ph 800-423-0150 • www.tsbrass.com

Date: 05/26/16