Medical and Lavatory Faucets

TAG:

B-2347

EasyInstall *Concealed Widespread Lavatory Faucet*

Architect/Engineering Specifications:

8" deck mount lavatory mixing faucet, 8 13/16" swivel gooseneck with rosespray outlet, compression cartridges, 4" wrist action handles, chrome plated escutcheons, 1/2" NPSM male inlets with coupling nuts and 4 ft. sidespray with hose guide. Certified to ASME A112.18.1/CSA B125.1, NSF/ANSI 61-Section 9 and NSF/ANSI 372. Meets ADA ANSI/ICC A117.1 requirements.

Job Name_____
Model Specified_____Quantity_____
Variations Specified_____
Date_____

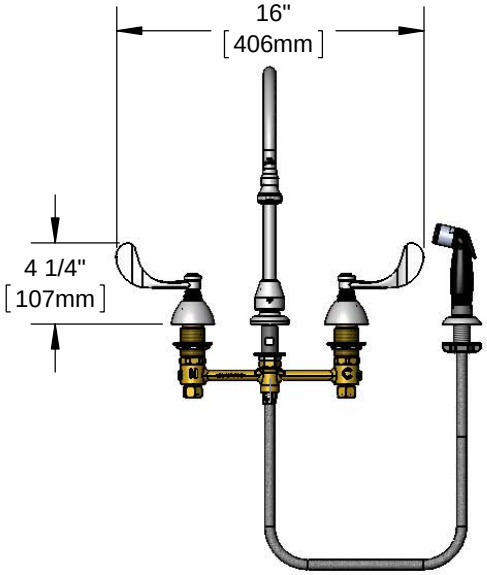

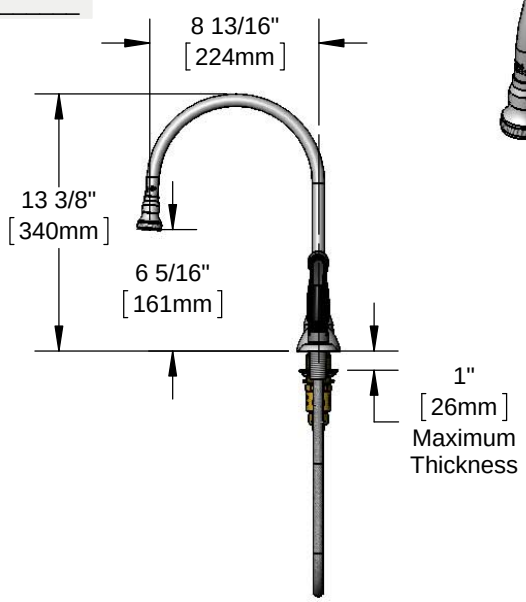

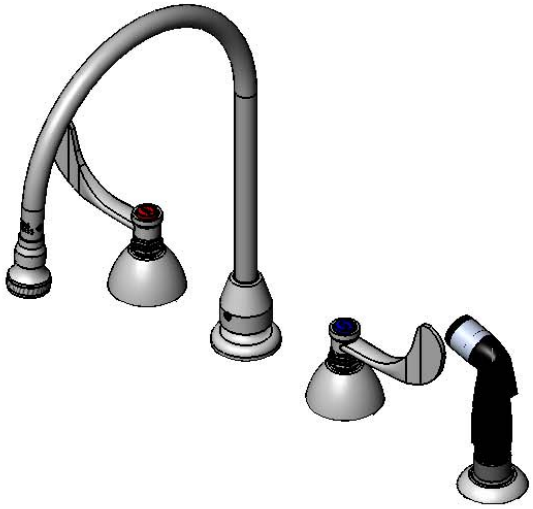

Features & Benefits:

- 8" EasyInstall concealed deck mount faucet w/ forged brass body
- 8 13/16" swivel gooseneck
- Rosespray outlet, Series 2
- Eterna compression cartridges
- 4" wrist action handles w/ color coded indexes
- 1/2" NPSM male inlets w/ coupling nuts
- 4 ft. sidespray with hose guide
- Material: Forged brass body, chrome plated brass tubular nozzle and chrome plated metal handles & escutcheons

Product Compliance:

- ASME A112.18.1 / CSA B125.1
- NSF 61 - Section 9
- NSF 372 (Low Lead Content)
- ANSI A117.1 (ADA)

Warranty: One Year (Limited)

ADA Compliant

Performance Data:

- Pressure: 20 - 125 psi
- Temperature: 40°F -140°F
- Flow Rate:
  Nozzle: 3.78 GPM @ 60 psi
  Sidespray: 2.2 GPM @ 60 psi

Optional Outlets (Series 2 / VR Series 7)

GPM	Aerated	Non-Aerated (Laminar)	VR Aerated	VR Non-Aerated (VR Laminar)
0.35	N/A	☐ B-0199-02-N035	N/A	☐ B-0199-07-N035
0.5	N/A	☐ B-0199-02-N05	N/A	☐ B-0199-07-N05
1.0	☐ B-0199-02-F10	N/A	☐ B-0199-07-F10	N/A
1.5	☐ B-0199-02-WS	N/A	☐ B-0199-07-WS	N/A
2.2	☐ B-0199-02	N/A	☐ B-0199-07	N/A

Optional Handles

- ☐ 4" Wrist Action (Standard)
- ☐ Lever
- ☐ 4-Arm

Optional Cartridges

- ☐ Quarter-Turn Cerama
- ☐ Eterna (Standard)
- ☐ Quarter-Turn Eterna
- ☐ Push Button Metering
- ☐ Pivot Action Metering
- ☐ Wrist Action Metering

T&S BRASS AND BRONZE WORKS, INC.
• 2 Saddleback Cove • Travelers Rest, SC 29690
Ph 800-476-4103 • Fax 864-834-3518
• Simi Valley, CA • Ph 800-423-0150 • www.tsbrass.com

Date: 02/04/16