Medical and Lavatory Faucets

TAG:

B-2347-166X

EasyInstall *Concealed Widespread Lavatory Faucet*

Architect/Engineering Specifications:

8" concealed deck mount mixing faucet, 9" swing nozzle with 2.2 GPM aerator, compression cartridges with spring checks, 4" wrist action handles, chrome plated escutcheons, 1/2" NPT male inlets with coupling nuts and 4 ft. sidespray with hose guide. Certified to ASME A112.18.1/CSA B125.1, NSF 61-Section 9 and NSF 372. Meets ADA ANSI/ICC A117.1 requirements.

Job Name_____
Model Specified_____Quantity_____
Variations Specified_____
Date_____

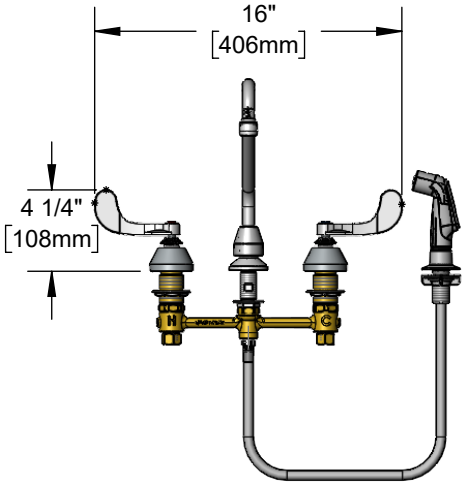

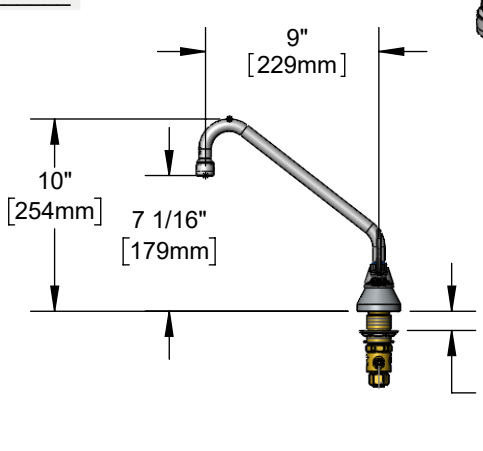

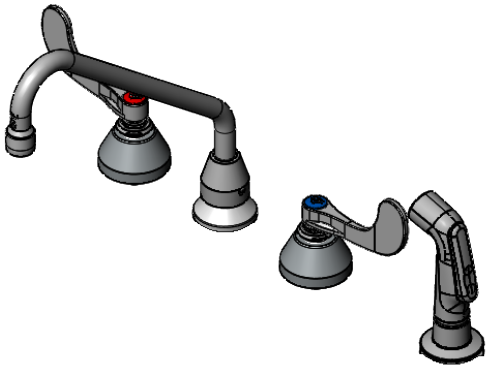

Features & Benefits:

- 8" EasyInstall concealed deck mount faucet w/ forged brass body
- 9" swivel gooseneck
- 2.2 GPM aerator, Series 1 (B-0199-01)
- Quarter-turn Eterna cartridges w/ spring checks to prevent the cross flow of water
- 4" wrist action handles w/ color coded indexes
- 1/2" NPT male inlets w/ coupling nuts
- 4 ft. sidespray with hose guide
- Material: Forged brass body, chrome plated brass tubular nozzle, thermoplastic sidespray body and chrome plated metal handles & escutcheons

Product Compliance:

- ASME A112.18.1 / CSA B125.1
- NSF 61 - Section 9
- NSF 372 (Low Lead Content)
- ANSI A117.1 (ADA)

Warranty: One Year (Limited)

Performance Data:

- Pressure: 20 - 125 psi [1.38 - 8.62 bar]
- Temperature: 40°F - 140°F [4.44°C - 60°C]
- Flow Rate:
  Nozzle: 2.2 GPM [8.3 L/min] @ 60 psi [4.14 bar]
  Sidespray: 2.2 GPM [8.3 L/min] @ 60 psi [4.14 bar]

ADA Compliant

Optional Outlets (Series 1 / VR Series 6)

GPM	Aerated	Non-Aerated (Laminar)	VR Aerated	VR Non-Aerated (VR Laminar)
0.35	N/A	☐ B-0199-01-N035	N/A	☐ B-0199-06-N035
0.5	N/A	☐ B-0199-01-N05	N/A	☐ B-0199-06-N05
1.0	☐ B-0199-01-F10	N/A	☐ B-0199-06-F10	N/A
1.2	☐ B-0199-01-F12	☐ B-0199-01-LF12	☐ B-0199-06-F12	☐ B-0199-06-LF12
1.5	☐ B-0199-01-WS	☐ B-0199-29	☐ B-0199-06-WS	☐ B-0199-29VR
2.2	☐ Standard	☐ B-0199-21	☐ B-0199-06	☐ B-0199-21-VRF

Optional Handles

- ☐ 4" Wrist Action (Standard)
- ☐ Lever
- ☐ 4-Arm

Optional Cartridges

- ☐ Quarter-Turn Cerama w/ Check Valve
- ☐ Quarter-Turn Eterna w/ Spring Check (Standard)
- ☐ Push Button Metering
- ☐ Pivot Action Metering
- ☐ Wrist Action Metering

T&S BRASS AND BRONZE WORKS, INC.
• 2 Saddleback Cove • Travelers Rest, SC 29690
Ph 800-476-4103 • Fax 864-834-3518
• Simi Valley, CA • Ph 800-423-0150 • www.tsbrass.com

Date: 09/06/23