Complete Hose Reel Systems

B-2339-7132MVBH

TAG:

Control Unit and Hose Reel Assembly

Architect/Engineering Specifications:

Hose reel control unit, stainless steel water control cabinet containing 1/2” union inlets and outlet, 1/2” check valves, loose key mixing valve with compression spindles, bi-metallic thermometer, dual check valve backflow preventer, shut-off valve and water hammer arrestor, open coated hose reel with 3/8” x 35’ heavy-duty non-marking hose, ratcheting system, 1.42 GPM spray valve, vacuum breaker, 3/8" NPT flexible water hose connector with stainless steel quick disconnect, multi-fit bracket and adjustable hose bumper. Certified to ASSE 1024.

Job Name_____
Model Specified_____Quantity_____
Variations Specified_____
Date_____

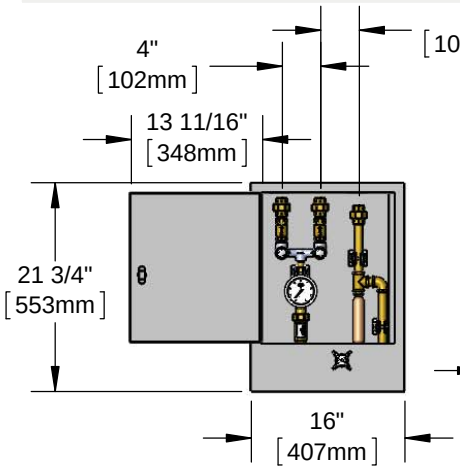

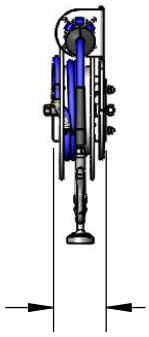

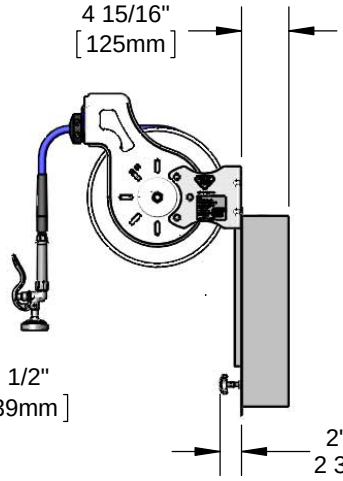

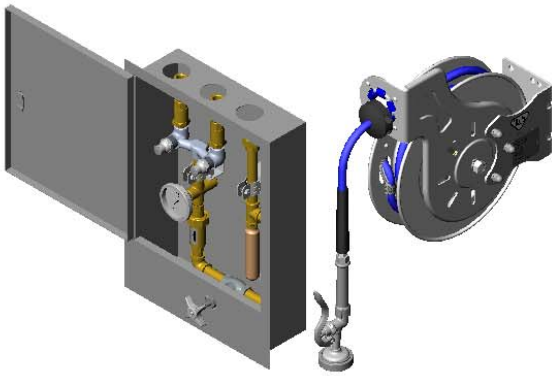

Features & Benefits:

- Flush mount stainless steel control cabinet with locking latch contains water control system
- 1/2” NPT female union inlets (2) and outlet
- 1/2” in-line check valves
- Loose key mixing valve with compression spindles, tee handles and screws
- Bi-metallic thermometer with ∅3” dial face
- Dual check valve backflow preventer
- Shut-off valve with 4-arm handle operable from outside of closed cabinet
- Continuous pressure vacuum breaker (included)
- 36" flexible water hose connector w/ stainless steel quick disconnect (included)
- Open stainless steel hose reel with 3/8” NPT female inlet
- 1.42 GPM spray valve w/ heat resistant blue handle and hold down ring
- 3/8” x 35’ heavy-duty non-marking hose rated to 300 PSI
- Ratcheting system holds the length of hose until a slight tug to retract automatically
- Adjustable hose bumper
- Multi-fit bracket for wall, ceiling or under counter mounting
- Material: Stainless steel cabinet, open reel, chrome plated metal handle, brass control unit components and wall bracket.

Product Compliance:

- NSF 61 Exempt (Non-Potable)
- EPAct 2005 Compliant (PRSV)
- EPAct 2005 Non-Compliant (PRSV)

Warranty: One Year (Limited)

- Hose Reel: Two Year (Limited)

Performance Data:

- Pressure: 20 - 125 psi
- Temperature: 40°F - 140°F
- Flow Rate: 1.42 GPM @ 60 psi

Optional Hose Reel Spray Valves

☐	B-0107	Spray Valve (Standard)
☐	B-0108	Ergonomic Medium Flow Spray Valve
☐	B-0108-H	Ergonomic High Flow Spray Valve
☐	EB-0107	High Flow Spray Valve
☐	EB-2322	Extended Spray Wand
☐	MV-2516-24	Stainless Steel Rear Trigger Water Gun
☐	MV-2522-24	Stainless Steel Front Trigger Water Gun
☐	MV-3516-24	Aluminum Rear Trigger Water Gun

T&S BRASS AND BRONZE WORKS, INC.
• 2 Saddleback Cove • Travelers Rest, SC 29690
Ph 800-476-4103 • Fax 864-834-3518
• Simi Valley, CA • Ph 800-423-0150 • www.tsbrass.com

Date: 07/05/16