Pre-Rinse Units

B-2244

TAG:

Pre-Rinse Unit

Architect/Engineering Specifications:

Single hole deck mount mixing faucet with polished chrome plated brass body, 18” riser, 44” flexible stainless steel hose with heat resistant handle, 1.42 GPM spray valve, compression cartridges with spring checks, lever handles, 18” flexible stainless steel supply hoses with 1/2” NPSM / 5/8” compression connections, spray valve holder and overhead spring. Certified to ASME A112.18.1/CSA B125.1, NSF 61-Section 9 and NSF 372. EPAct 2005 compliant.

Job Name_____
Model Specified_____Quantity_____
Variations Specified_____
Date_____

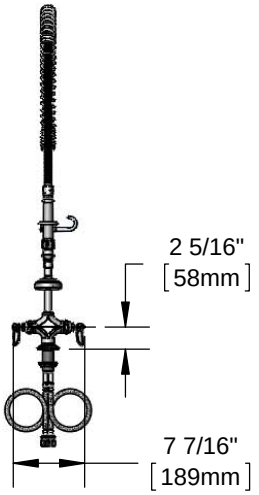

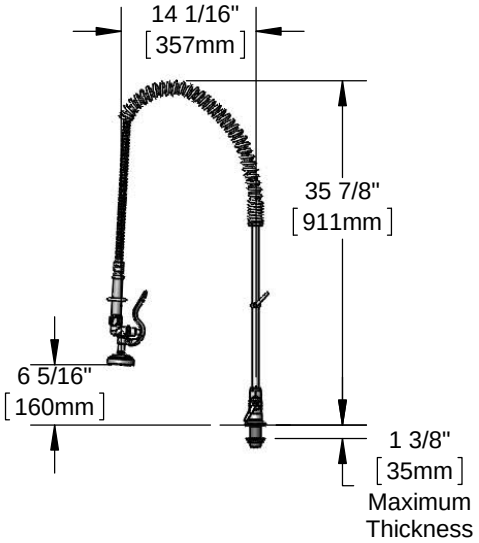

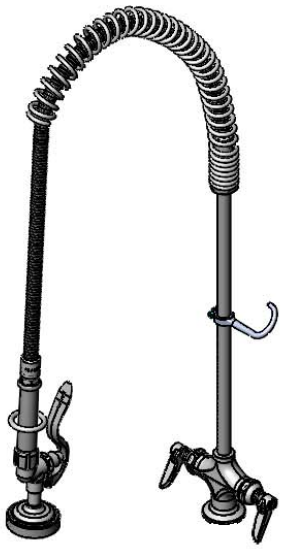

Features & Benefits:

- Single hole deck mount mixing faucet w/ polished chrome plated brass body
- 18" riser
- 44” flexible stainless steel hose w/ heat resistant gray handle and hold down ring
- 1.42 GPM spray valve
- Quarter-turn Eterna compression cartridges with spring checks to prevent cross flow of water
- Lever handles w/ color coded indexes
- 18” flexible stainless steel supply hoses w/ 1/2” NPSM / 5/8” compression connections
- Material: Polished chrome plated brass body, riser & spray valve body, stainless steel hose and chrome plated metal handles

Product Compliance:

- ASME A112.18.1 / CSA B125.1
- NSF 61 - Section 9
- NSF 372 (Low Lead Content)
- EPAct 2005 (PRSV)

Warranty: One Year (Limited)

Performance Data:

- Pressure: 20 - 125 psi
- Temperature: 40°F - 140°F
- Flow Rate: 1.42 GPM @ 60 psi

Optional Handles

☐ 4" Wrist Action
☐ Lever (Standard)
☐ 4-Arm

Optional Cartridges With Checks

☐ Quarter-Turn Cerama w/ Check Valve
☐ Quarter-Turn Eterna w/ Spring Check (Standard)

Optional Pre-Rinse Spray Valves

☐ B-0107 (1.42 GPM) (Standard)
☐ B-0107-C (0.65 GPM)
☐ B-0107-J (1.07 GPM)
☐ B-0108 (1.48 GPM)
☐ B-0108-C (0.65 GPM)

T&S BRASS AND BRONZE WORKS, INC.
• 2 Saddleback Cove • Travelers Rest, SC 29690
Ph 800-476-4103 • Fax 864-834-3518
• Simi Valley, CA • Ph 800-423-0150 • www.tsbrass.com

Date: 09/30/16