Workboard / Bar Sink Faucets

B-1115-132X

TAG:

Workboard Mixing Faucet

Architect/Engineering Specifications:

4” wall mount mixing faucet with chrome plated brass body, 2 11/16” swivel gooseneck with 2.2 GPM aerator, compression cartridges with spring checks, lever handles, 1/2” NPT male inlets and chrome plated escutcheon. Certified to ASME A112.18.1/CSA B125.1, NSF 61-Section 9 and NSF 372. Meets ADA ANSI/ICC A117.1 requirements.

Job Name_____
Model Specified_____Quantity_____
Variations Specified_____
Date_____

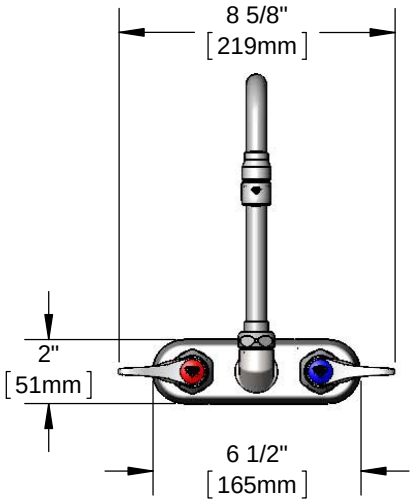

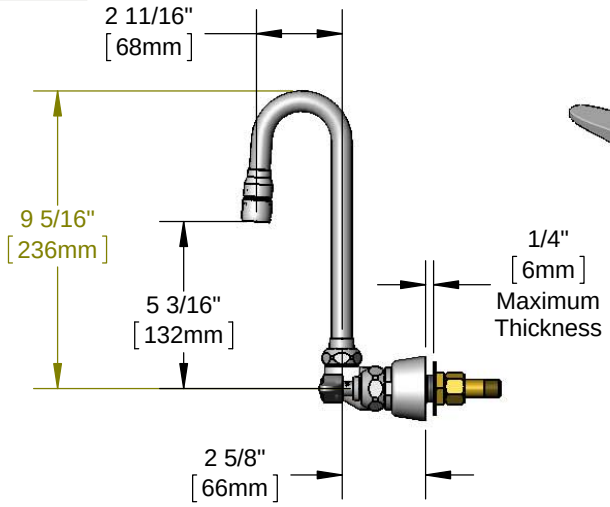

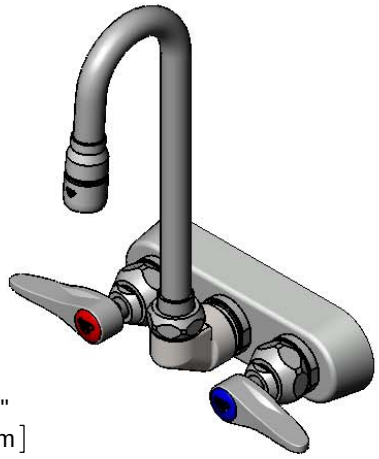

Features & Benefits:

- 4" wall mount mixing faucet w/ chrome plated brass body
- 2 11/16” swivel gooseneck
- 2.2 GPM aerator, Series 2 (B-0199-02)
- Quarter-turn Eterna compression cartridges w/ spring checks to prevent cross flow of water
- Lever handles w/ color coded indexes
- 1/2” NPT male inlets
- Tailpieces and nuts for 1/4” NPT male connections
- Chrome plated escutcheon
- Material: Chrome plated brass body & tubular spout and chrome plated metal handles & escutcheon

Product Compliance:

- ASME A112.18.1 / CSA B125.1
- NSF 61 - Section 9
- NSF 372 (Low Lead Content)
- ANSI A117.1 (ADA)

Warranty: One Year (Limited)

Performance Data:

- Pressure: 20 - 125 psi
- Temperature: 40 °F - 140 °F
- Flow Rate: 2.2 GPM @ 60 psi

ADA Compliant

Optional Outlets (Series 2 / VR Series 7)

GPM	Aerated	Non-Aerated (Laminar)	VR Aerated	VR Non-Aerated (VR Laminar)
0.35	N/A	☐ B-0199-02-N035	N/A	☐ B-0199-07-N035
0.5	N/A	☐ B-0199-02-N05	N/A	☐ B-0199-07-N05
1.0	☐ B-0199-02-F10	N/A	☐ B-0199-07-F10	N/A
1.5	☐ B-0199-02-WS	N/A	☐ B-0199-07-WS	N/A
2.2	Standard	N/A	☐ B-0199-07	N/A

Optional Handles

☐ 4" Wrist Action
☐ Lever (Standard)

Optional Cartridges With Checks

☐ Quarter-Turn Cerama w/ Check Valve
☐ Quarter-Turn Eterna w/ Spring Check (Standard)

T&S BRASS AND BRONZE WORKS, INC.
• 2 Saddleback Cove • Travelers Rest, SC 29690
Ph 800-476-4103 • Fax 864-834-3518
• Simi Valley, CA • Ph 800-423-0150 • www.tsbrass.com

Date: 06/01/16