Medical and Lavatory Faucets

B-0831-WS

TAG:

Slow Self-Closing Metering Faucet

Architect/Engineering Specifications:

4" centerset deck mount mixing faucet with polished chrome plated brass body and integral spout, 1.5 GPM aerator, metering cartridges, push button caps and 1/2" NPSM male inlets. Certified to ASME A112.18.1/CSA B125.1, NSF 61-Section 9 and NSF 372. Meets ADA ANSI/ICC A117.1 requirements.

Job Name_____
Model Specified_____Quantity_____
Variations Specified_____
Date_____

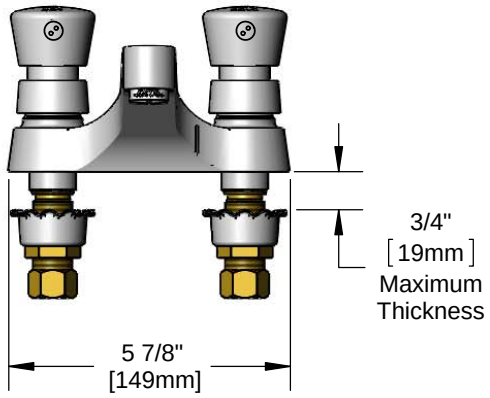

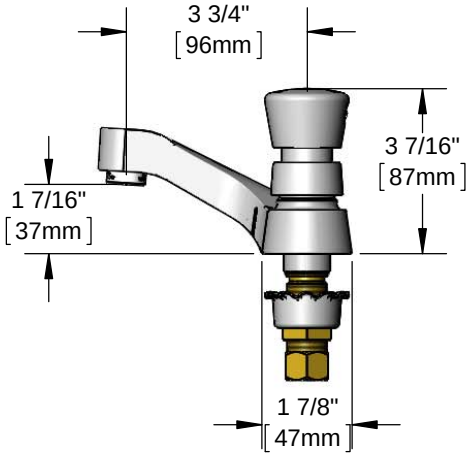

Features & Benefits:

- 4" centerset deck mount mixing faucet w/ polished chrome plated brass body and integral spout
- 1.5 GPM aerator, Series 3 (B-0199-03-WS)
- Metering cartridges
- Adjustable metering cycle, 10 to 30 seconds
- Push button (hot & cold) caps w/ vandal resistant screws
- 1/2" NPSM male inlets
- Material: Polished chrome plated brass body & spout and chrome plated metal caps

Product Compliance:

- ASME A112.18.1 / CSA B125.1
- NSF 61 - Section 9
- NSF 372 (Low Lead Content)
- ANSI A117.1 (ADA)

Warranty: One Year (Limited)

Performance Data:

- Pressure: 20 - 125 psi
- Temperature: 40°F - 140°F
- Flow Rate: 1.5 GPM @ 60 psi
- Water Consumption: @ 10 sec = .25 gal
  @ 15 sec = .37 gal

ADA Compliant

Optional Outlets (Series 3 / VR Series 8)

GPM	Aerated	Non-Aerated (Laminar)	VR Aerated	VR Non-Aerated (VR Laminar)
0.35	N/A	☐ B-0199-03-N035	N/A	☐ B-0199-08-N035
0.5	N/A	☐ B-0199-03-N05	N/A	☐ B-0199-08-N05
1.0	N/A	N/A	N/A	☐ B-0199-08-LF10
1.2	☐ B-0199-03-F12	N/A	☐ B-0199-08-F12	N/A
1.5	Standard	N/A	☐ B-0199-08-WS	☐ B-0199-08-LF15
2.2	☐ B-0199-03	☐ B-0199-26	☐ B-0199-08	☐ B-0199-28

Optional Cartridges

☐ Push Button Metering (Standard)
☐ Pivot Action Metering
☐ Wrist Action Metering

T&S BRASS AND BRONZE WORKS, INC.
• 2 Saddleback Cove • Travelers Rest, SC 29690
Ph 800-476-4103 • Fax 864-834-3518
• Simi Valley, CA • Ph 800-423-0150 • www.tsbrass.com

Date: 09/30/16