Medical Bedpan Washers

B-0676

TAG:

Bedpan Washer

Architect/Engineering Specifications:

Wall mount double pedal valve with 1/2" NPT female angled loose key stop inlets, 3/8” NPT female angled loose key stop volume control outlet, elevated atmospheric vacuum breaker with 3/8” NPT female inlet and outlet, wall hook outlet with 3/8 NPT female inlet, 68” PVC hose with heat resistant handle and extended nozzle. Certified to ASME A112.18.1/CSA B125.1, NSF 61-Section 9, NSF-372 and ASSE 1001.

Job Name_____
Model Specified_____Quantity_____
Variations Specified_____
Date_____

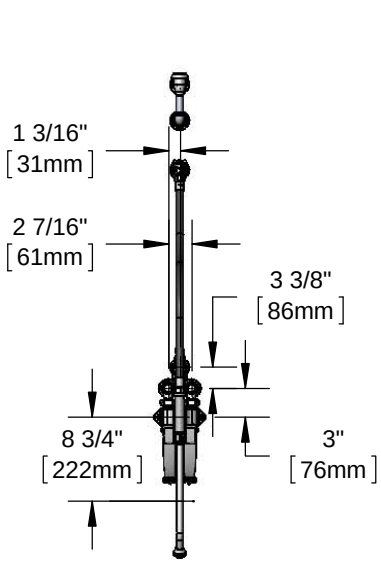

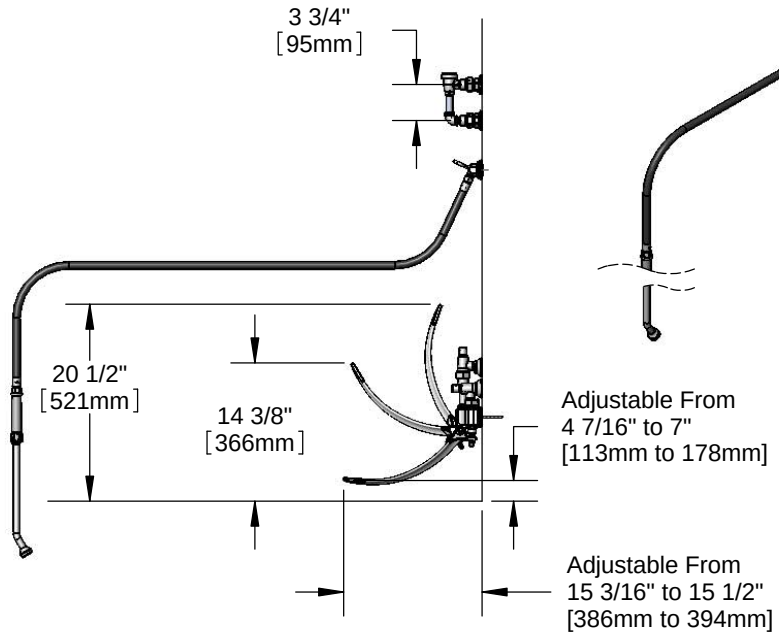

Features & Benefits:

- Wall mount double pedal valve with polished chrome plated brass body
- Pedal valve with 1/2” NPT female angled loose key stops
- Volume control valve with 3/8” NPT female outlet on pedal valve
- Wall hook outlet with 3/8” NPT female inlet
- Elevated vacuum breaker with 3/8” female inlet and outlet
- 68” PVC hose with extended spray nozzle
- Material: Polished chrome plated brass body, loose key stops, vacuum breaker, wall hook outlet & extended nozzle, aluminum pedals and reinforced PVC hose.

Product Compliance:

- ASME A112.18.1 / CSA B125.1
- NSF 61 - Section 9
- NSF 372 (Low Lead Content)
- ASSE 1001 (VB)

Warranty: One Year (Limited)

Performance Data:

- Pressure: 20 - 125 psi
- Temperature: 40˚F - 140˚F
- Flow Rate: 4.09 GPM @ 60 psi

T&S BRASS AND BRONZE WORKS, INC.
• 2 Saddleback Cove • Travelers Rest, SC 29690
Ph 800-476-4103 • Fax 864-834-3518
• Simi Valley, CA • Ph 800-423-0150 • www.tsbrass.com

Date: 04/25/15