Service Sink / Mop Sink Faucets

B-0669-02

TAG:

Service Sink Faucet

Architect/Engineering Specifications:

Adjustable wall mount mixing faucet with rough chrome plated brass body, rough chrome plated brass spout with vacuum breaker, pail hook and garden hose male outlet, compression cartridges with spring checks, lever handles and 1/2" NPT female inlets with built-in service stops. Certified to ASME A112.18.1/CSA B125.1, NSF 61-Section 9, NSF 372 and ASSE 1001. Meets ADA ANSI/ICC A117.1 requirements.

Job Name_____
Model Specified_____Quantity_____
Variations Specified_____
Date_____

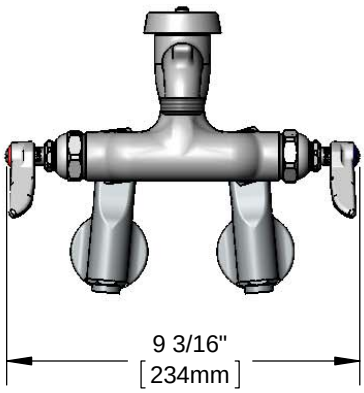

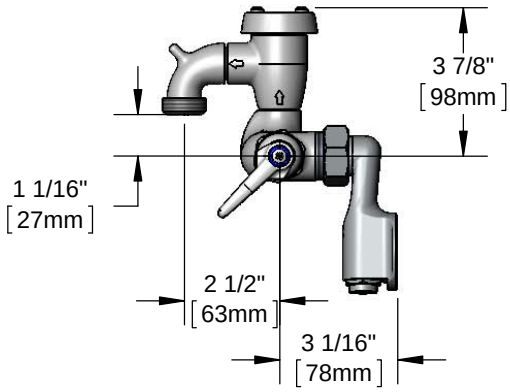

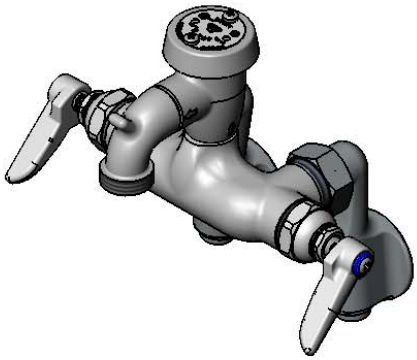

Features & Benefits:

- Adjustable wall mount mixing faucet with rough chrome plated brass body
- Vacuum breaker spout with pail hook & garden hose male outlet
- Lever handles with color coded indexes
- Quarter-turn Eterna cartridges with spring checks to prevent cross flow of water
- 1/2" NPT female adjustable arm inlets with ∅2" flanges and built-in service stops
- Adjustable centers from 2 1/4" to 8 1/4" above or below centerline
- Material: Rough chrome plated brass body & spout and chrome plated metal handles

Product Compliance:

- ASME A112.18.1 / CSA B125.1
- NSF 61 - Section 9
- NSF 372 (Low Lead Content)
- ANSI A117.1 (ADA)
- ASSE 1001 (VB)

Warranty: One Year (Limited)

Performance Data:

- Pressure: 20 - 125 psi
- Temperature: 40°F - 140°F
- Flow Rate: 14.37 GPM @ 60 psi

ADA Compliant

Optional Handles

- ☐ 4" Wrist Action
- ☐ Lever (Standard)
- ☐ 4-Arm

Optional Cartridges With Checks

- ☐ Quarter-Turn Cerama w/ Check Valve
- ☐ Quarter-Turn Eterna w/ Spring Check (Standard)

T&S BRASS AND BRONZE WORKS, INC.
• 2 Saddleback Cove • Travelers Rest, SC 29690
Ph 800-476-4103 • Fax 864-834-3518
• Simi Valley, CA • Ph 800-423-0150 • www.tsbrass.com

Date: 08/24/16