Rigid Sink And Pantry Faucets

B-0342

TAG:

Double Pantry Faucet

Architect/Engineering Specifications:

Adjustable wall mount mixing faucet with polished chrome plated brass body, 5 1/2” rigid gooseneck with stream regulator outlet, compression cartridges, lever handles and 1/2” NPT female inlets with service stops. Certified to ASME A112.18.1/CSA B125.1, NSF 61-Section 9 and NSF 372. Meets ADA ANSI/ICC A117.1 requirements.

Job Name_____
Model Specified_____Quantity_____
Variations Specified_____
Date_____

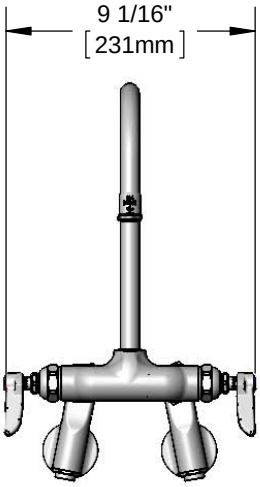

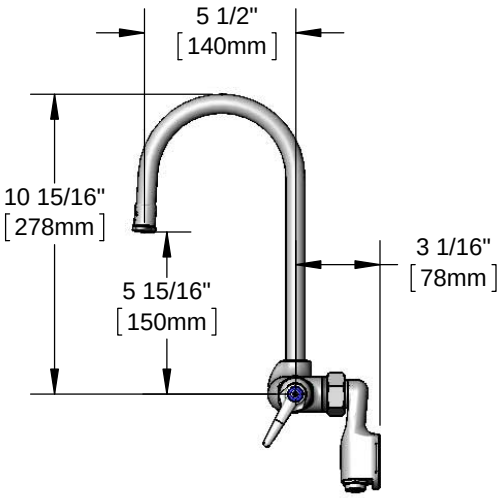

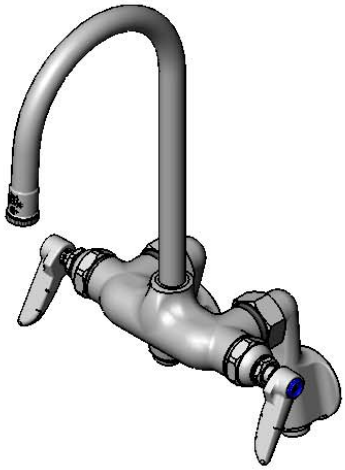

Features & Benefits:

- Adjustable inlet wall mount mixing faucet with polished chrome plated brass body
- 5 1/2” rigid gooseneck
- Stream regulator outlet, Series 2
- Eterna compression cartridges
- Lever handles w/ color coded indexes
- 1/2” NPT female adjustable arm inlets w/ service stops and Ø 2” flanges
- Adjustable centers from 2 1/4” to 8 1/4” above or below centerline
- Material: Polished chrome plated brass body & tubular spout and chrome plated metal handles

Product Compliance:

- ASME A112.18.1 / CSA B125.1
- NSF 61 - Section 9
- NSF 372 (Low Lead Content)
- ANSI A117.1 (ADA)

Warranty: One Year (Limited)

ADA Compliant

Performance Data:

- Pressure: 20 - 125 psi
- Temperature: 40˚F -140˚F
- Flow Rate: 18.60 GPM @ 60 psi

Optional Outlets (Series 2 / VR Series 7)

GPM	Aerated	Non-Aerated (Laminar)	VR Aerated	VR Non-Aerated (VR Laminar)
0.35	N/A	☐ B-0199-02-N035	N/A	☐ B-0199-07-N035
0.5	N/A	☐ B-0199-02-N05	N/A	☐ B-0199-07-N05
1.0	☐ B-0199-02-F10	N/A	☐ B-0199-07-F10	N/A
1.5	☐ B-0199-02-WS	N/A	☐ B-0199-07-WS	N/A
2.2	☐ B-0199-02	N/A	☐ B-0199-07	N/A

Optional Handles

☐ 4" Wrist Action
☐ Lever (Standard)
☐ 4-Arm

Optional Cartridges

☐ Quarter-Turn Cerama
☐ Eterna (Standard)
☐ Quarter-Turn Eterna

T&S BRASS AND BRONZE WORKS, INC.
• 2 Saddleback Cove • Travelers Rest, SC 29690
Ph 800-476-4103 • Fax 864-834-3518
• Simi Valley, CA • Ph 800-423-0150 • www.tsbrass.com

Date: 06/22/16