T&S BRASS AND BRONZE WORKS, INC.

2 Saddleback Cove / P.O. Box 1088
Travelers Rest, SC 29690

Travelers Rest, SC: 800-476-4103 • Simi Valley, CA: 800-423-0150 • Fax: 864-834-3518 • www.tsbrass.com

Model No.

B-0317

Item No.

This Space for Architect/Engineer Approval

Job Name_____Date_____

Model Specified_____ Quantity_____

Customer/Wholesaler_____

Contractor_____

Architect/Engineer_____

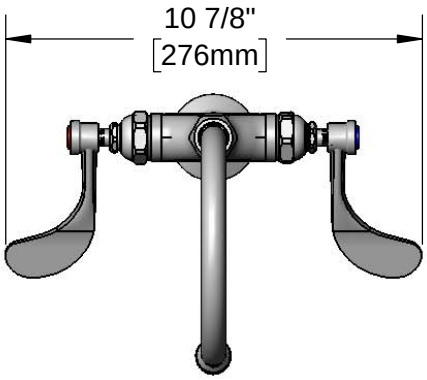

ADA Compliant

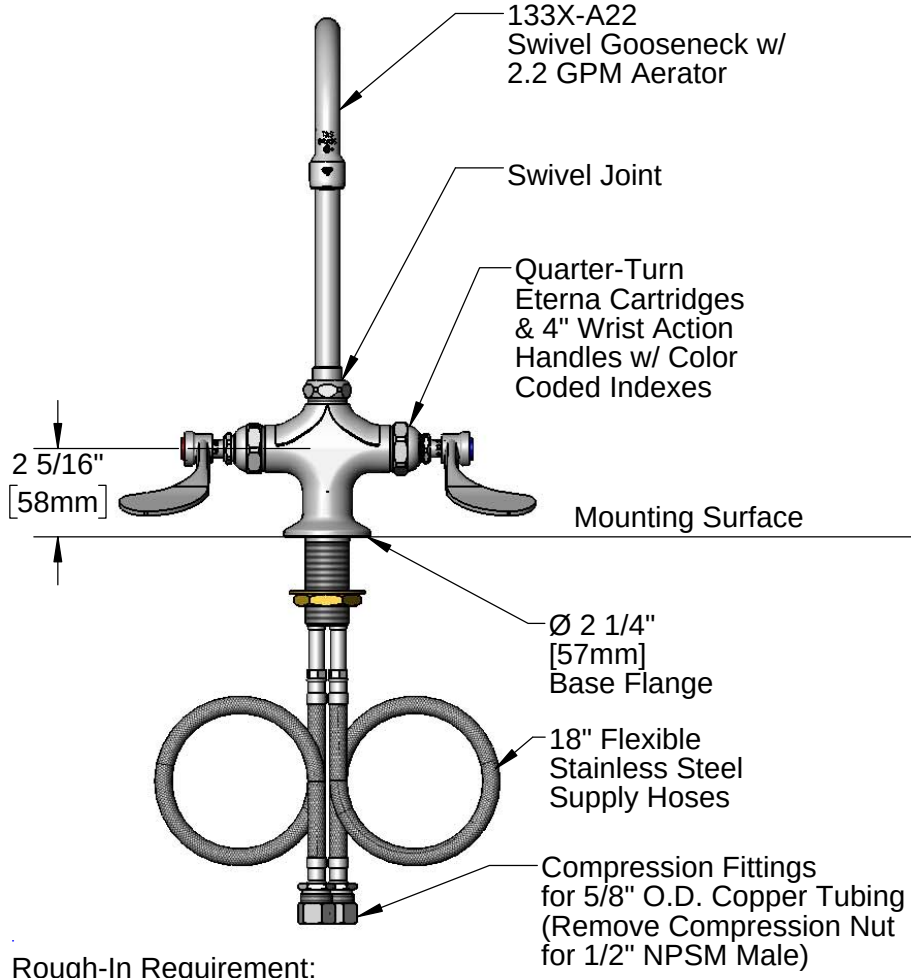

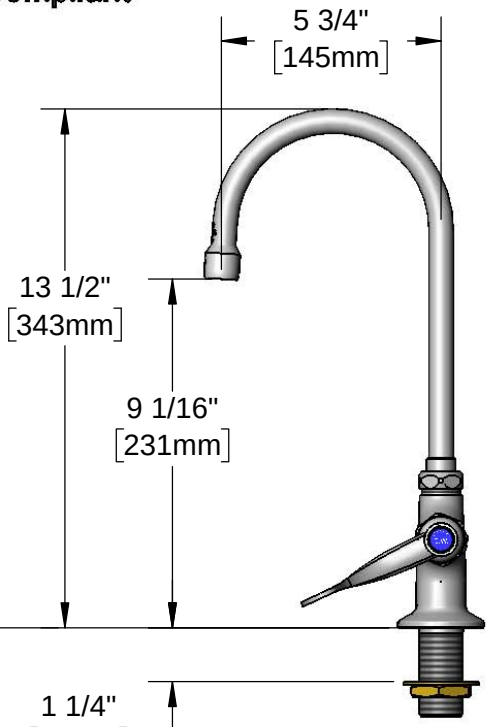

Rough-In Requirement:
∅1 1/2" [38mm] Mounting Hole

Product Specifications:

Single Hole Deck Mount Mixing Faucet, Quarter-Turn Eterna Cartridges, 4" Wrist Action Handles, 5 3/4" Swivel Gooseneck w/ 2.2 GPM Aerator, 18" Flexible Stainless Steel Supply Hoses w/ 1/2" NPSM Male Inlets

Product Compliance:

ASME A112.18.1 / CSA B125.1
NSF 61 - Section 9
NSF 372 (Low Lead Content)
ANSI A117.1 (ADA)

Drawn: KJG	Checked: DMH	Approved: JHB	Date: 03/07/17	Scale: 1:5	Sheet: 1 of 2

T&S BRASS AND BRONZE WORKS, INC.

2 Saddleback Cove / P.O. Box 1088
Travelers Rest, SC 29690

Travelers Rest, SC: 800-476-4103 • Simi Valley, CA: 800-423-0150 • Fax: 864-834-3518 • www.tsbrass.com

Model No.

B-0317

Item No.

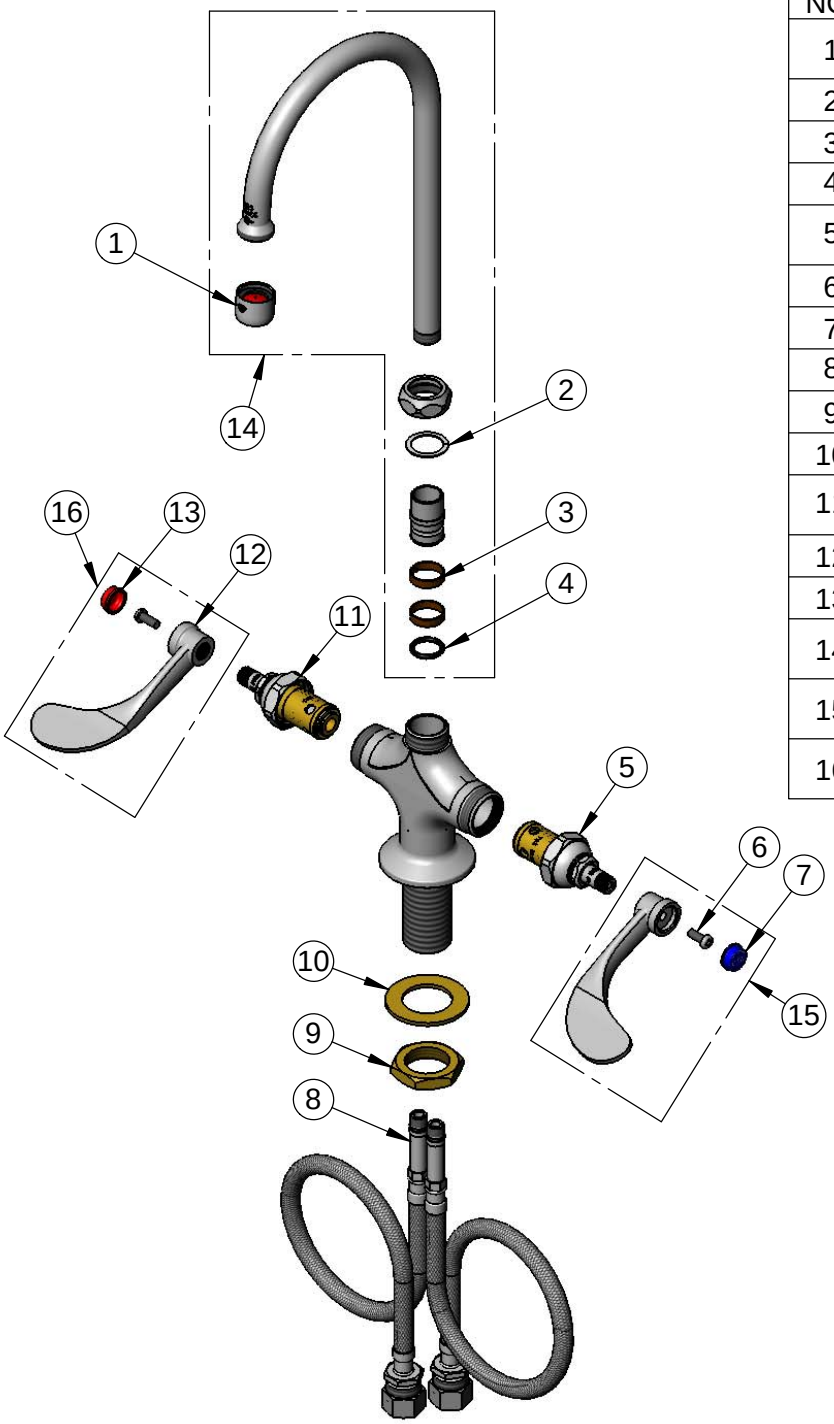

ITEM NO.	SALES NO.	DESCRIPTION
1	B-0199-01	2.2 GPM Aerator, 55/64"-27 UN Female
2	009538-45	Swivel Washer
3	011429-45	Swivel Sleeves (2)
4	001074-45	O-Ring
5	006009-40QT	Quarter-Turn Eterna Cartridge, LTC
6	000925-45	Lab Handle Screw
7	001686-45	Blue Index - CW
8	012534-45	18" Flexible Supply Hose (2)
9	000965-45	Lock Nut
10	002290-45	Lock Washer
11	006010-40QT	Quarter-Turn Eterna Cartridge, RTC
12	B-WH4	4" Wrist Action Handle
13	001194-45	Red Index - HW
14	133X-A22	6" Swivel Gooseneck w/ 2.2 GPM Aerator
15	B-WH4C	4" Wrist Action Handle, Screw & Cold Index
16	B-WH4H	4" Wrist Action Handle, Screw & Hot Index

Product Specifications:

Single Hole Deck Mount Mixing Faucet, Quarter-Turn Eterna Cartridges, 4" Wrist Action Handles, 5 3/4" Swivel Gooseneck w/ 2.2 GPM Aerator, 18" Flexible Stainless Steel Supply Hoses w/ 1/2" NPSM Male Inlets

Product Compliance:

ASME A112.18.1 / CSA B125.1
NSF 61 - Section 9
NSF 372 (Low Lead Content)
ANSI A117.1 (ADA)

Drawn: KJG	Checked: DMH	Approved: JHB	Date: 03/07/17	Scale: NTS	Sheet: 2 of 2