Swivel Sink and Pantry Faucets

B-0230-0CS8-CR

TAG:

Double Pantry Faucet

Architect/Engineering Specifications:

8” wall mount mixing faucet with polished chrome plated brass body, 8" cast spout with stream regulator outlet, ceramic cartridges, lever handles and 1/2” NPT female inlets. Certified to ASME A112.18.1/CSA B125.1, NSF 61-Section 9 and NSF 372. Meets ADA ANSI/ICC A117.1 requirements.

Job Name_____
Model Specified_____Quantity_____
Variations Specified_____
Date_____

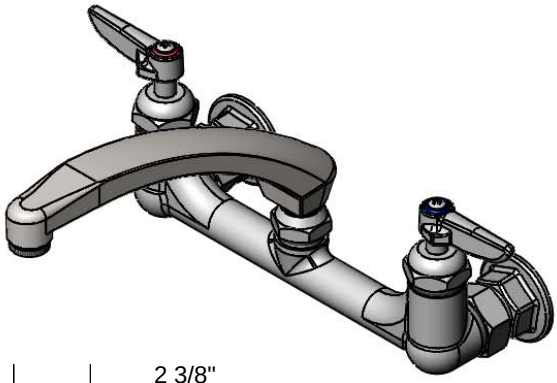

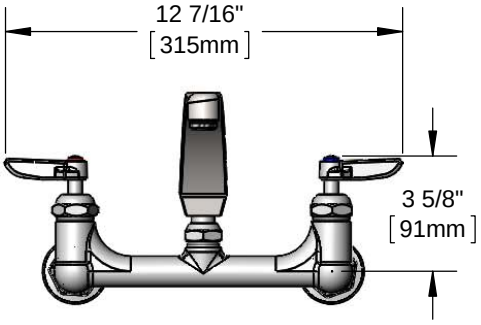

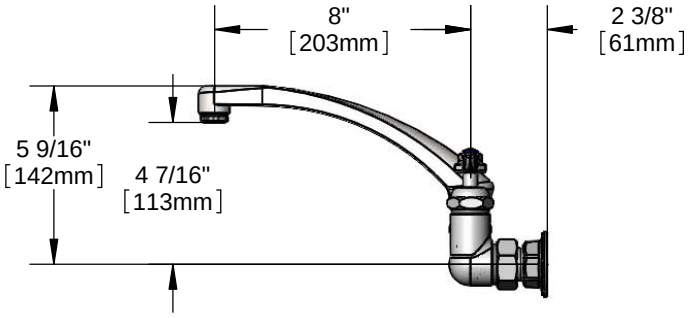

Features & Benefits:

- 8” wall mount mixing faucet with polished chrome plated brass body
- 8" cast spout
- Stream regulator outlet, Series 1
- Cerama cartridges
- Lever handle w/ color coded indexes
- 1/2” NPT female eccentric inlets w/ Ø 2” flanges
- Adjustable centers from 7 3/4” to 8 1/4”
- Material: Polished chrome plated brass body and chrome plated metal handles

Product Compliance:

- ASME A112.18.1 / CSA B125.1
- NSF 61 - Section 9
- NSF 372 (Low Lead Content)
- ANSI A117.1 (ADA)

Warranty: One Year (Limited)

- Cerama Cartridge: Lifetime (Limited)

Performance Data:

- Pressure: 20 - 125 psi
- Temperature: 40°F - 180°F
- Flow Rate: 14.53 GPM @ 60 psi

ADA Compliant

Optional Outlets (Series 1 / VR Series 6)

GPM	Aerated	Non-Aerated (Laminar)	VR Aerated	VR Non-Aerated (VR Laminar)
0.35	N/A	☐ B-0199-01-N035	N/A	☐ B-0199-06-N035
0.5	N/A	☐ B-0199-01-N05	N/A	☐ B-0199-06-N05
1.0	☐ B-0199-01-F10	N/A	☐ B-0199-06-F10	N/A
1.5	☐ B-0199-01-WS	☐ B-0199-29	☐ B-0199-06-WS	☐ B-0199-29VR
2.2	☐ B-0199-01	☐ B-0199-21	☐ B-0199-06	☐ B-0199-21-VRF

Optional Handles

- ☐ 4" Wrist Action
- ☐ Lever (Standard)
- ☐ 4-Arm

Optional Cartridges

- ☐ Quarter-Turn Cerama (Standard)
- ☐ Eterna
- ☐ Quarter-Turn Eterna

T&S BRASS AND BRONZE WORKS, INC.
• 2 Saddleback Cove • Travelers Rest, SC 29690
Ph 800-476-4103 • Fax 864-834-3518
• Simi Valley, CA • Ph 800-423-0150 • www.tsbrass.com

Date: 10/21/15