Pre-Rinse Units

B-0133-14CRBJSX

TAG:

EasyInstall *Pre-Rinse Unit*

Architect/Engineering Specifications:

8” wall mount mixing faucet with polished chrome plated brass body, add-on faucet with ceramic cartridge and lever handle, 14” swing nozzle with stream regulator outlet, 10” riser, 44” flexible stainless steel hose with heat resistant handle and swivel, 1.07 GPM spray valve, ceramic cartridges with check valves, lever handles, accessory fitting tee and 1/2" NPT male elbow installation kit, 6” adjustable wall bracket, spray valve holder and overhead spring. Certified to ASME A112.18.1/CSA B125.1, NSF 61-Section 9 and NSF 372. EPAct 2005 compliant.

Job Name_____
Model Specified_____Quantity_____
Variations Specified_____
Date_____

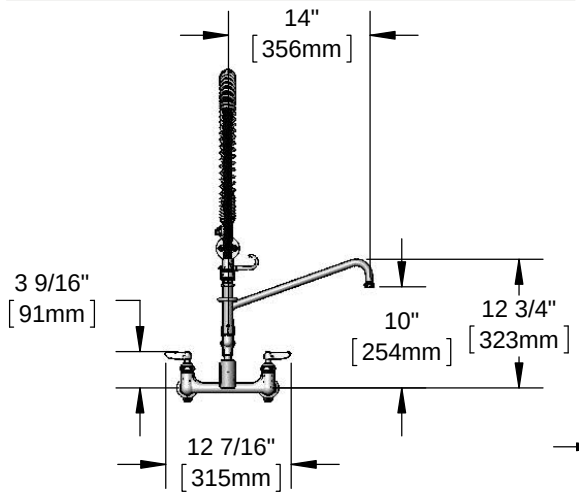

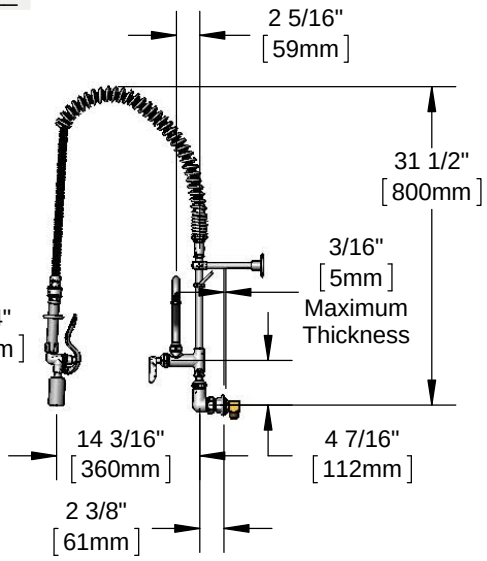

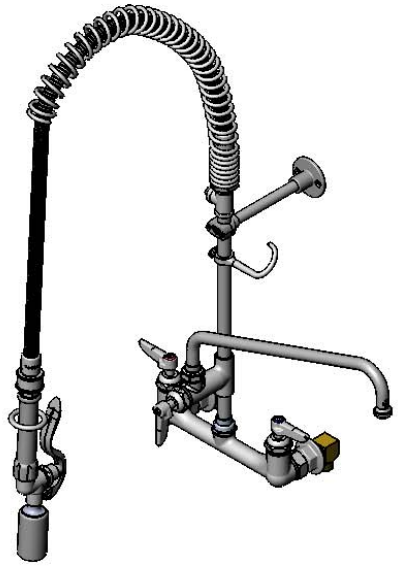

Features & Benefits:

- 8” wall mount mixing faucet w/ polished chrome plated brass body
- EasyInstall add-on faucet w/ polished chrome plated brass body
- 14” swing nozzle w/ stream regulator outlet, Series 1
- 10” rigid riser
- 44” flexible stainless steel hose w/ heat resistant gray handle and hold down ring and swivel
- 1.07 GPM spray valve
- Quarter-turn Cerama cartridges w/ check valves to prevent cross flow of water
- Lever handles w/ color coded indexes
- Accessory fitting tee
- 1/2" NPT female eccentric inlets with ∅2" flanges
- 1/2" NPT male elbow Installation kit
- 6” adjustable wall bracket
- Material: Polished chrome plated brass body, tubular nozzle, add-on faucet, riser & spray valve body, stainless steel hose and chrome plated metal handles

Product Compliance:

- ASME A112.18.1 / CSA B125.1
- NSF 61 - Section 9
- NSF 372 (Low Lead Content)
- EPAct 2005 (PRSV)
- EPA WaterSense (PRSV)

Warranty: Three Year (Limited)

- Cerama Cartridge: Lifetime (Limited)

Performance Data:

- Pressure: 20 - 125 psi
- Temperature: 40˚F - 140˚F
- Flow Rate:
  - Spray Valve: 1.07 GPM @ 60 psi
  - Add-On Faucet: 6.89 GPM @ 60 psi

Optional Add-On Faucet Outlets (Series 1 / VR Series 6)

GPM	Aerated	VR Aerated (VR Laminar)
1.0	☐ B-0199-01-F10	☐ B-0199-06-F10
1.5	☐ B-0199-01-WS	☐ B-0199-06-WS
2.2	☐ B-0199-01	☐ B-0199-06

Optional Cartridges With Checks

☐ Quarter-Turn Cerama w/ Check Valve (Standard)
☐ Quarter-Turn Eterna w/ Spring Check

Optional Pre-Rinse Spray Valves

☐ B-0107 (1.42 GPM)
☐ B-0107-C (0.65 GPM)
☐ B-0107-J (1.07 GPM) (Standard)
☐ B-0108 (1.48 GPM)

Optional Handles

☐ 4" Wrist Action
☐ Lever (Standard)
☐ 4-Arm

T&S BRASS AND BRONZE WORKS, INC.
• 2 Saddleback Cove • Travelers Rest, SC 29690
Ph 800-476-4103 • Fax 864-834-3518
• Simi Valley, CA • Ph 800-423-0150 • www.tsbrass.com

Date: 06/24/16