# Pre-Rinse Units

# B-0123-A12-08C

**TAG:**

EasyInstall *Pre-Rinse Unit*

**Architect/Engineering Specifications:**

8" deck mount mixing faucet with polished chrome plated brass body, add-on faucet with compression cartridge and lever handle, 12" swing nozzle with stream regulator outlet, 24" riser, 44" flexible stainless steel hose, 0.65 GPM low flow spray valve with insulated grip handle, compression cartridges with spring checks, lever handles, 1/2" NPT female inlets, spray valve holder and overhead spring. Certified to ASME A112.18.1/CSA B125.1, NSF 61-Section 9 and NSF 372. EPAct 2005 compliant.

Job Name_____
Model Specified_____Quantity_____
Variations Specified_____
Date_____

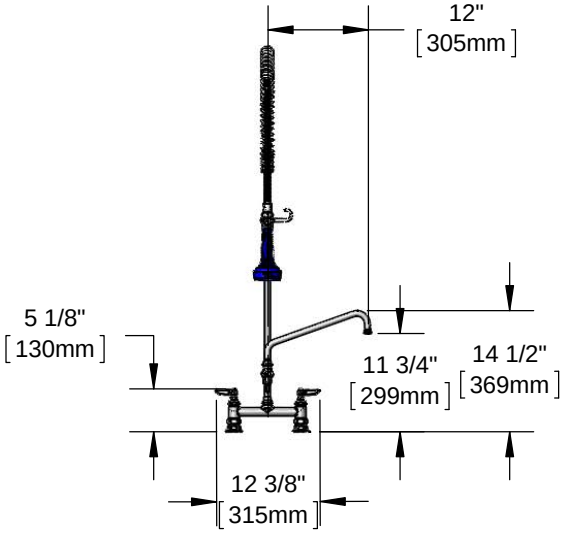


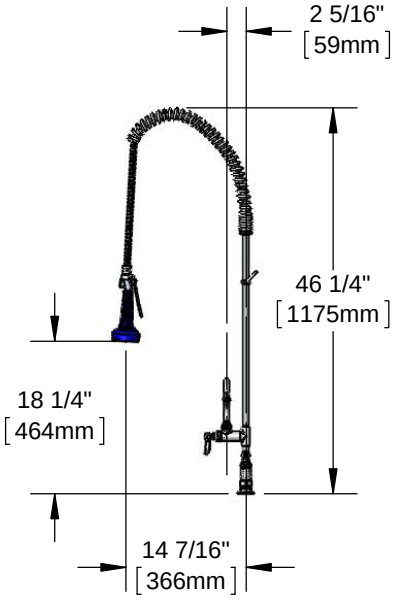


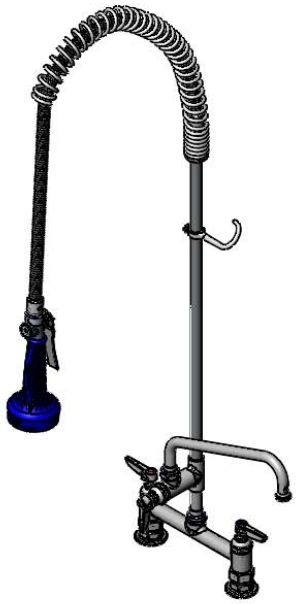

**Features & Benefits:**

- 8" deck mount mixng faucet w/ polished chrome plated brass body
- EasyInstall add-on faucet w/ polished chrome plated brass body
- 12" swing nozzle w/ stream regulator outlet, Series 1
- 24" rigid riser
- 44" flexible stainless steel hose
- 0.65 GPM low flow JetSpray valve w/ insulated grip handle stainless steel trigger and trigger lock
- Quarter-turn Eterna compression cartridges w/ internal spring checks to prevent cross flow of water
- Lever handles w/ color coded indexes
- 1/2" NPT female eccentric inlets w/ ∅2" flanges
- Adjustable centers from 7 3/4" to 8 1/4"
- Material: Polished chrome plated brass body, add-on faucet, riser and spray valve, stainless steel hose & chrome plated metal handles

**Product Compliance:**

- ASME A112.18.1 / CSA B125.1
- NSF 61 - Section 9
- NSF 372 (Low Lead Content)
- EPAct 2005 (PRSV)
- EPA WaterSense (PRSV)

**Warranty:** Three Year (Limited)

**Performance Data:**

- Pressure: 20 - 125 psi
- Temperature: 40°F - 140°F
- Flow Rate:
  Spray Valve: 0.65 GPM @ 60 psi
  Add-On Faucet: 6.49 GPM @ 60 psi

**Optional Add-On Faucet Outlets (Series 1 / VR Series 6)**

| GPM | Aerated | VR Aerated (VR Laminar) |
|---|---|---|
| 1.0 | ☐ B-0199-01-F10 | ☐ B-0199-06-F10 |
| 1.5 | ☐ B-0199-01-WS | ☐ B-0199-06-WS |
| 2.2 | ☐ B-0199-01 | ☐ B-0199-06 |

**Optional Cartridges With Checks**

☐ Quarter-Turn Cerama w/ Check Valve
☐ Quarter-Turn Eterna w/ Spring Check (Standard)

**Optional Pre-Rinse Spray Valves**

☐ B-0107 (1.42 GPM)
☐ B-0107-C (0.65 GPM)
☐ B-0107-J (1.07 GPM)
☐ B-0108 (1.48 GPM)
☐ B-0108-C (0.65 GPM) (Standard)

**Optional Handles**

☐ 4" Wrist Action
☐ Lever (Standard)
☐ 4-Arm


**T&S BRASS AND BRONZE WORKS, INC.**
• 2 Saddleback Cove • Travelers Rest, SC 29690
Ph 800-476-4103 • Fax 864-834-3518
• Simi Valley, CA • Ph 800-423-0150 • www.tsbrass.com


Date: 04/12/16