T&S BRASS AND BRONZE WORKS, INC.

2 Saddleback Cove / P.O. Box 1088
Travelers Rest, SC 29690

REG. #A2601
ISO #9001

Travelers Rest, SC: 800-476-4103 • Simi Valley, CA: 800-423-0150 • Fax: 864-834-3518 • www.tsbrass.com

Model No.
PG-1DREV

Item No.

This Space for Architect/Engineer Approval

Job Name_____Date_____

Model Specified_____ Quantity_____

Customer/Wholesaler_____

Contractor_____

Architect/Engineer_____

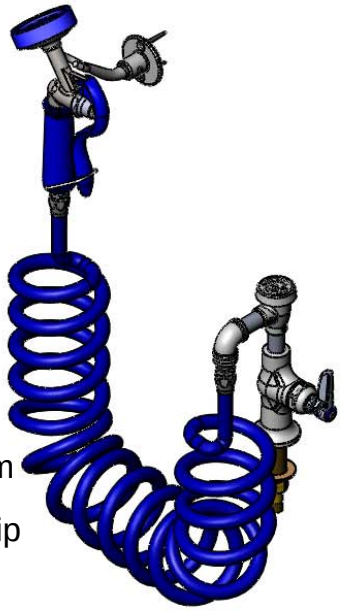

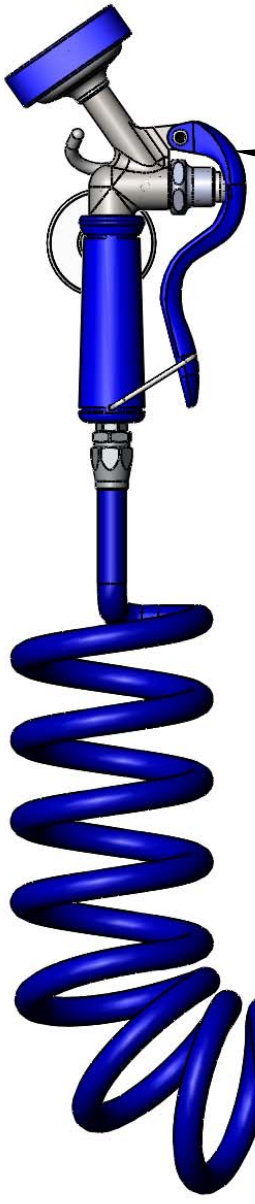

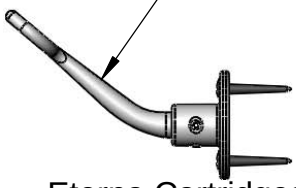

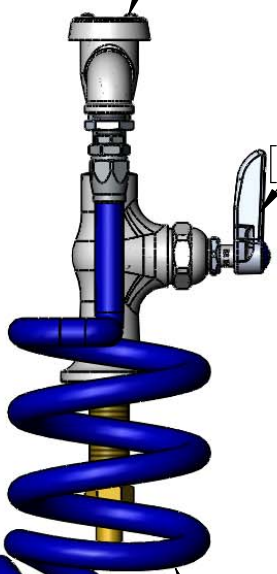

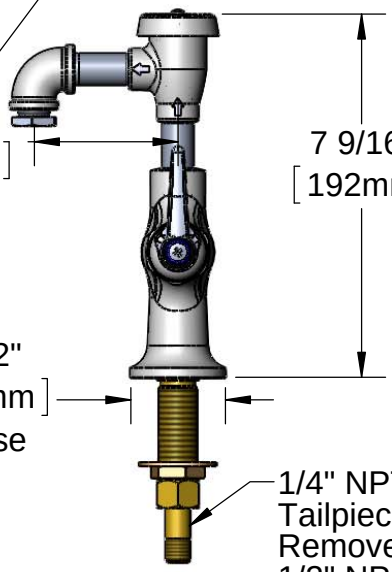

Product Specifications:
Pet Grooming Unit:
Single Hole Deck Mount w/ Vacuum Breaker,
9 Ft Coiled Hose and Angled Aluminum Spray Valve

Drawn	Checked	Approved
JRM	DMH	JHB
Scale: 1:4		Date: 08/08/11

T&S BRASS AND BRONZE WORKS, INC.

2 Saddleback Cove / P.O. Box 1088
Travelers Rest, SC 29690

Travelers Rest, SC: 800-476-4103 • Simi Valley, CA: 800-423-0150 • Fax: 864-834-3518 • www.tsbrass.com

REG. #A2601
ISO #9001

Model No.
PG-1DREV

Item No.

ITEM NO.	SALES NO.	DESCRIPTION
1	B-0166	Wall Hook
2	PG-35AV	Aluminum 35° Spray Valve
3	B-0968	3/8" Vacuum Breaker
4	PG-35AV-CH	Spray Valve w/ 9' of Coiled Hose
5	000922-45	Lever Handle Screw
6	001660-45	Blue Index-CW
7	001638-45	Lever Handle
8	005960-40	Hot Eterna Cartridge (RTC)
9	000999-45	Brass Lock Washer
10	002954-45	Shank Lock Nut
11	150A	Nut & Tailpiece

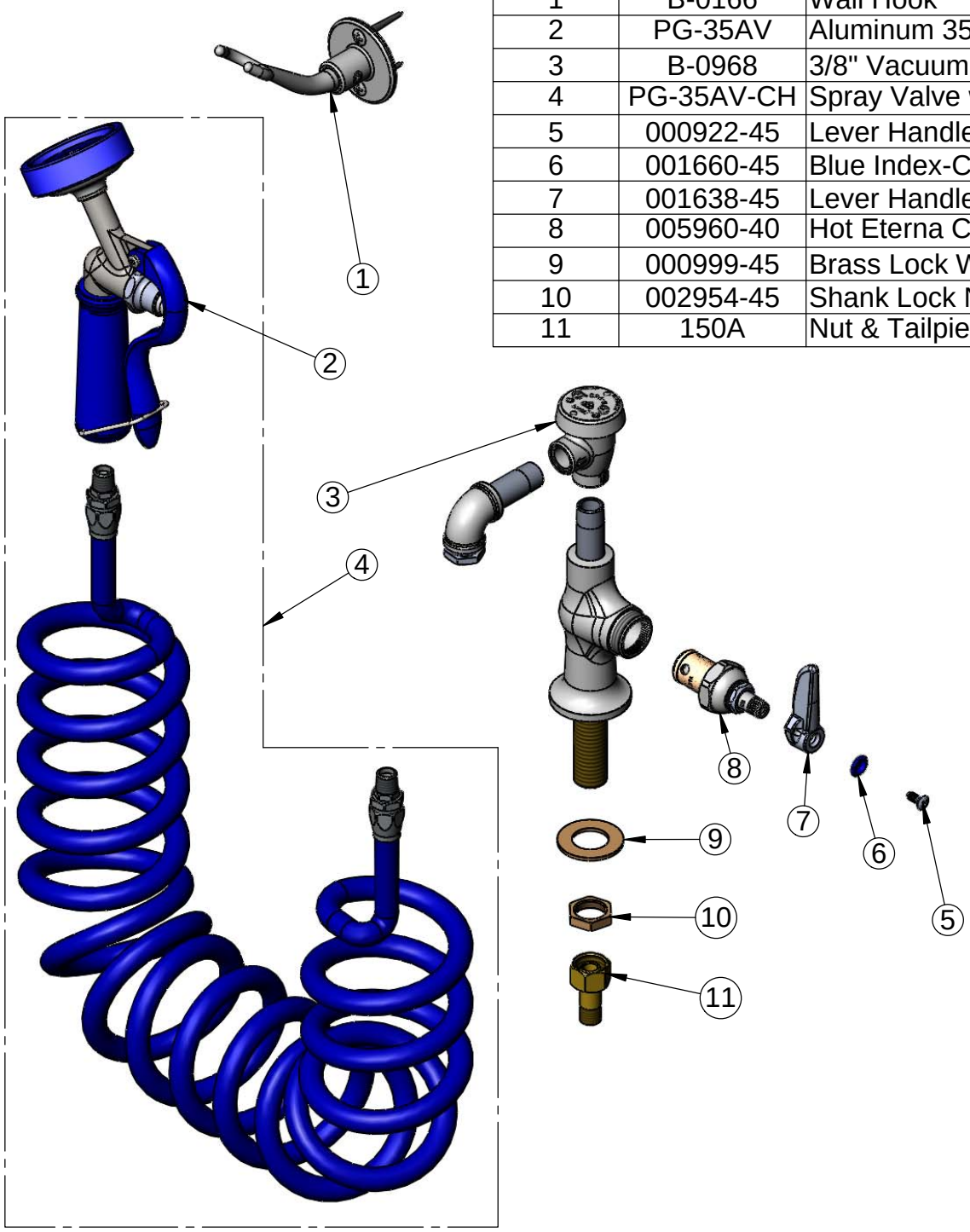

Product Specifications:
Pet Grooming Unit:
Single Hole Deck Mount w/ Vacuum Breaker,
9 Ft Coiled Hose and Angled Aluminum Spray Valve

Drawn	Checked	Approved
JRM	DMH	JHB
Scale: NTS		Date: 08/08/11