T&S BRASS AND BRONZE WORKS, INC.

2 Saddleback Cove / P.O. Box 1088
Travelers Rest, SC 29690

Travelers Rest, SC: 800-476-4103 • Simi Valley, CA: 800-423-0150 • Fax: 864-834-3518 • www.tsbrass.com

Model No.
B-1146

Item No.

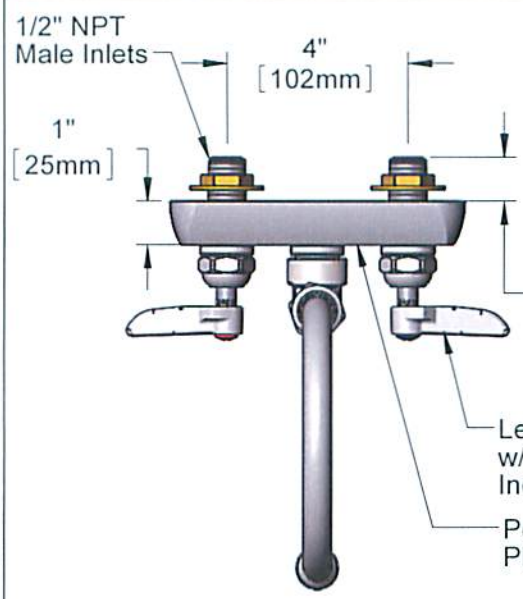

ADA Compliant

This Space for Architect/Engineer Approval

Job Name_____ Date_____

Model Specified_____ Quantity_____

Customer/Wholesaler_____

Contractor_____

Architect/Engineer_____

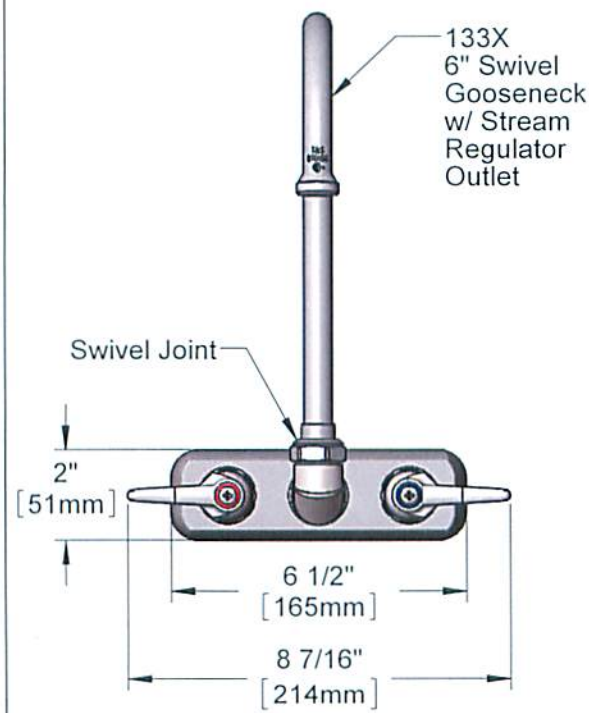

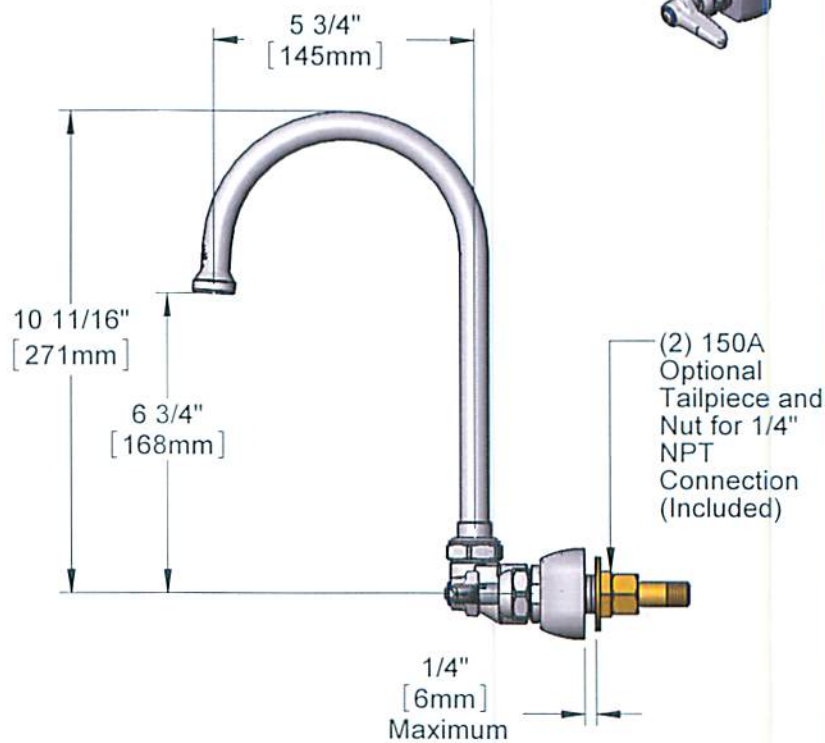

Rough-In Requirement:
(2) ∅1" [25mm] Mounting Holes

Product Specifications:
4" Wall Mount Workboard Mixing Faucet, Lever Handles, 6" Swivel Gooseneck & 1/2" NPT Male Inlets

CONTROLLED COPY

Product Compliance:

ASME A112.18.1 / CSA B125.1
NSF 61 - Section 9
NSF 372 (Low Lead Content)
ANSI A117.1 (ADA)

Drawn:	Checked:	Approved:	Date:	Scale:	Sheet:
JBC	JRM	JHB	02/23/16	1:4	1 of 2

T&S BRASS AND BRONZE WORKS, INC.

2 Saddleback Cove / P.O. Box 1088
Travelers Rest, SC 29690

Travelers Rest, SC: 800-476-4103 • Simi Valley, CA: 800-423-0150 • Fax: 864-834-3518 • www.tsbrass.com

Model No.
B-1146

Item No.

ITEM NO.	SALES NO.	DESCRIPTION
1	001048-45	Nozzle Tip Washer
2	B-PT	Stream Regulator Outlet
3	009538-45	Swivel Washer
4	011429-45	Swivel Sleeves (2)
5	001074-45	O-Ring
6	133X	6" Swivel Gooseneck
7	009754-25	B-1100 Spindle, LTC
8	001017-45	Washer
9	001661-45	Red Index-HW
10	000922-45	Lever Handle Screw
11	001660-45	Blue Index-CW
12	001638-45	Lever Handle
13	009749-25	Bonnet Nut
14	009753-25	B-1100 Spindle, RTC
15	000712-25	Escutcheon Lock Nut
16	000763-20	Seat
17	001258-40	Escutcheon
18	000999-45	Brass Lock Washer
19	002954-45	Shank Lock Nut
20	150A	1/4" NPT Tailpiece & Nut
21	000082-40	B-1100 Knob

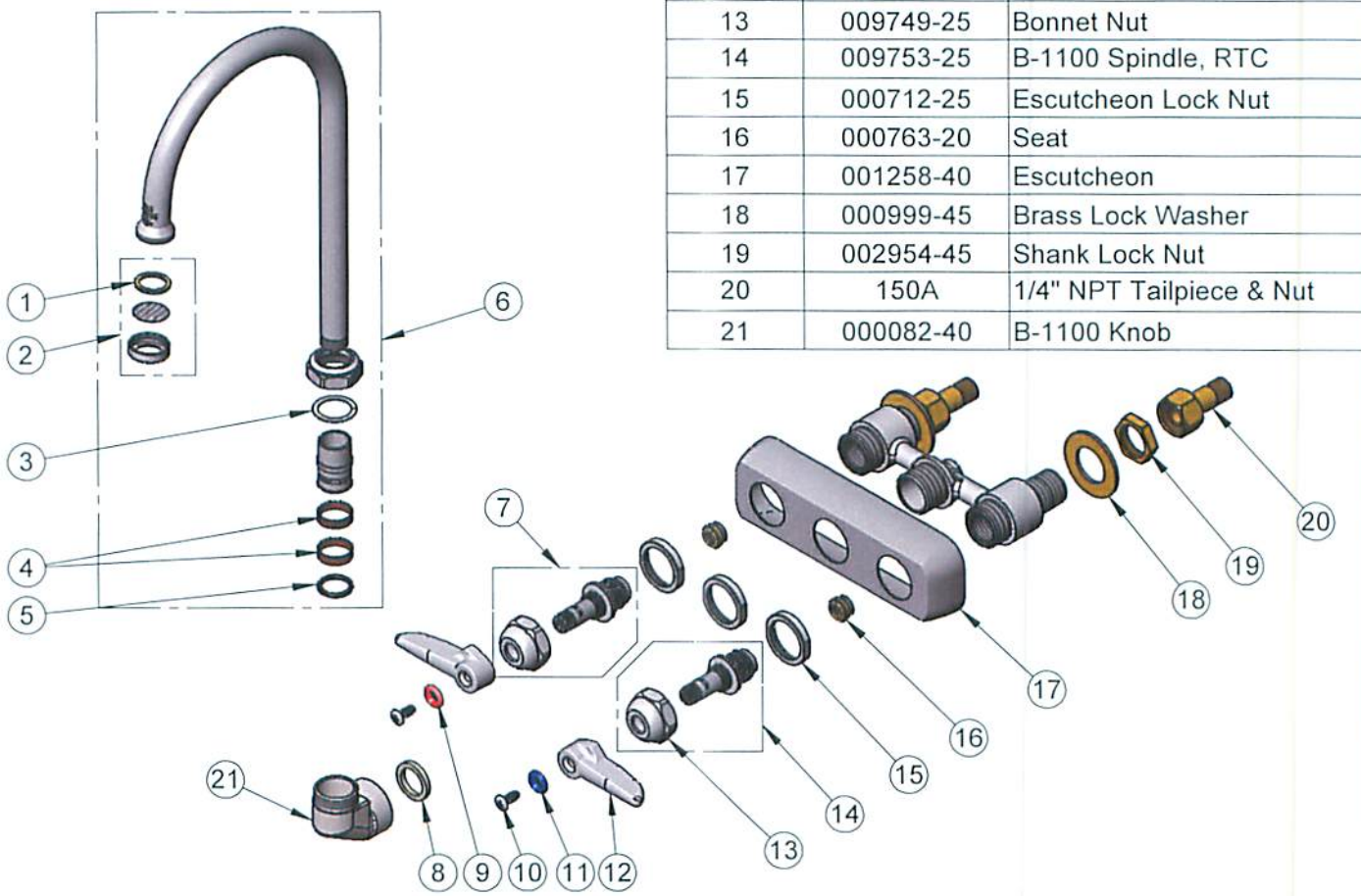

Product Specifications:
4" Wall Mount Workboard Mixing Faucet, Lever Handles, 6" Swivel Gooseneck & 1/2" NPT Male Inlets

CONTROLLED COPY

Product Compliance:

ASME A112.18.1 / CSA B125.1
NSF 61 - Section 9
NSF 372 (Low Lead Content)
ANSI A117.1 (ADA)

Drawn:	Checked:	Approved:	Date:	Scale:	Sheet:
JBC	JRM	JHB	02/23/16	NTS	2 of 2