T&S BRASS AND BRONZE WORKS, INC.

2 Saddleback Cove / P.O. Box 1088
Travelers Rest, SC 29690

Travelers Rest, SC: 800-476-4103 • Simi Valley, CA: 800-423-0150 • Fax: 864-834-3518 • www.tsbrass.com

Model No.
B-1112-XS

Item No.

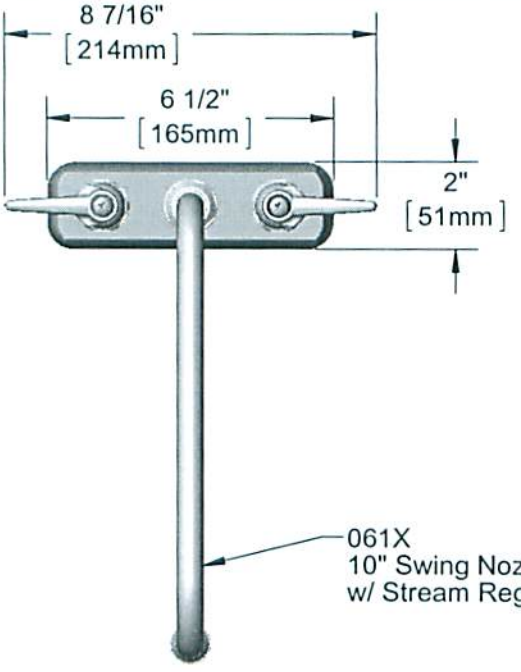

ADA Compliant

This Space for Architect/Engineer Approval

Job Name_____ Date_____

Model Specified_____ Quantity_____

Customer/Wholesaler_____

Contractor_____

Architect/Engineer_____

CONTROLLED COPY

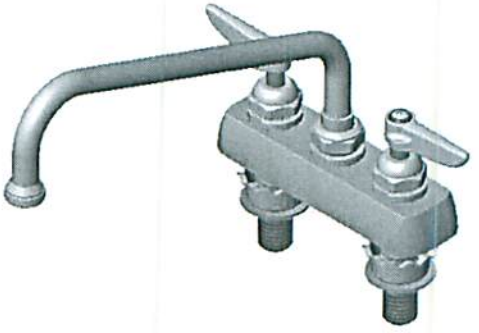

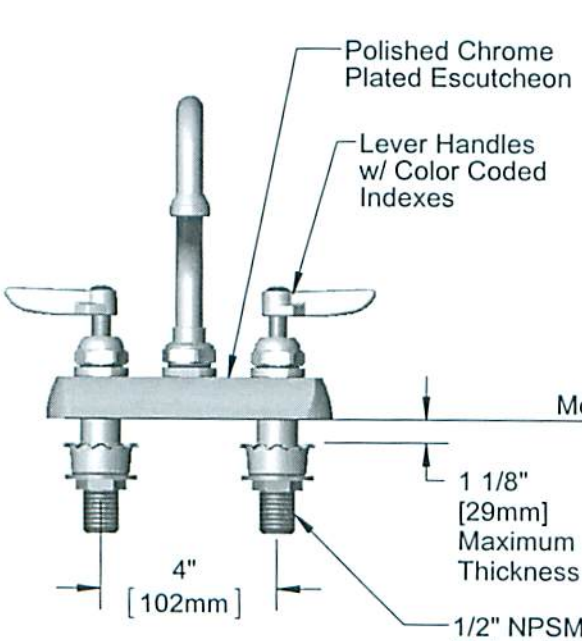

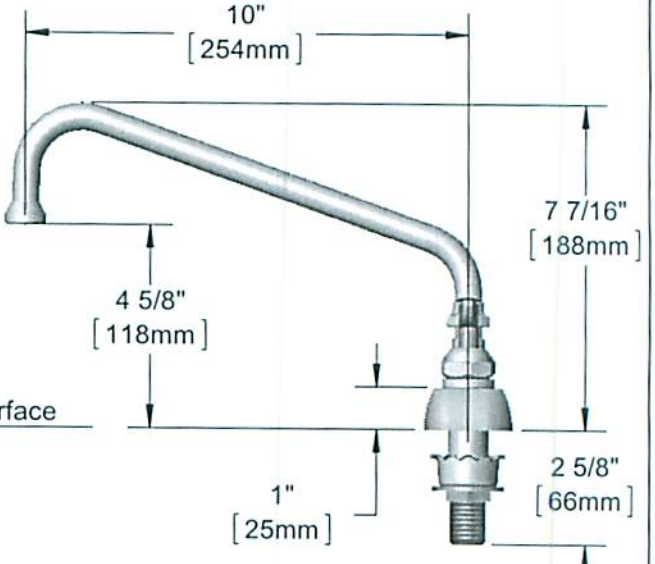

150A
Tailpiece and Nut
Included for 1/4" NPT
Connection

Rough-In Requirement:
(2) ∅1" [25mm] Mounting Holes

Product Specifications:
4" Deck Mount Workboard Mixing Faucet w/ Lever Handles, 10" Swing Nozzle, Stream Regulator & 1/2" NPSM Male Extended Shanks

Drawn	Checked	Approved
KJG	GEF	JHB
Scale: 1:4		Date: 05/31/12

T&S BRASS AND BRONZE WORKS, INC.

2 Saddleback Cove / P.O. Box 1088
Travelers Rest, SC 29690

Travelers Rest, SC: 800-476-4103 • Simi Valley, CA: 800-423-0150 • Fax: 864-834-3518 • www.tsbrass.com

Model No.
B-1112-XS

Item No.

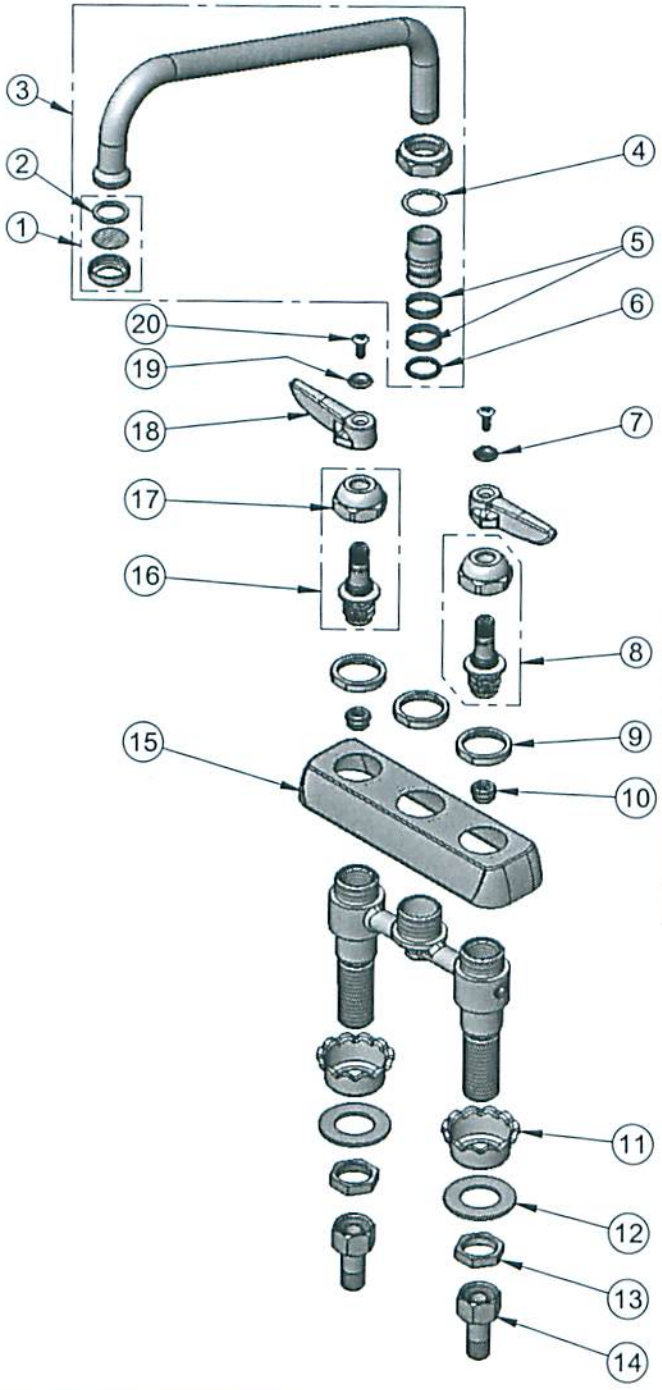

ITEM NO.	SALES NO.	DESCRIPTION
1	B-PT	Stream Regulator Outlet
2	001048-45	Nozzle Tip Washer
3	061X	10" Swing Nozzle
4	009538-45	Swivel Washer
5	011429-45	Swivel Sleeves (2)
6	001074-45	O-Ring
7	001660-45	Blue Index-CW
8	009754-25	B-1100 Spindle Assembly, LTC
9	000712-25	Escutcheon Lock Nut
10	000763-20	Seat
11	001000-45	Rosette Washer
12	000999-45	Brass Lock Washer
13	002954-45	Shank Lock Nut
14	150A	Bag of (1) Nut & (1) Tailpiece
15	001258-40	Escutcheon
16	009753-25	B-1100 Spindle Assembly, RTC
17	009749-25	Bonnet Nut
18	001638-45	Lever Handle
19	001661-45	Red Index-HW
20	000922-45	Lever Handle Screw

CONTROLLED COPY

Product Specifications:
4" Deck Mount Workboard Mixing Faucet w/ Lever Handles, 10" Swing Nozzle, Stream Regulator & 1/2" NPSM Male Extended Shanks

Drawn	Checked	Approved
KJG	GEF	JHB
Scale: NTS		Date: 05/31/12