T&S BRASS AND BRONZE WORKS, INC.

2 Saddleback Cove / P.O. Box 1088
Travelers Rest, SC 29690

Travelers Rest, SC: 800-476-4103 • Simi Valley, CA: 800-423-0150 • Fax: 864-834-3518 • www.tsbrass.com

Model No.

MPZ-8WLN-08

Item No.

For Commercial Use Only

This Space for Architect/Engineer Approval

Job Name_____Date_____

Model Specified_____ Quantity_____

Customer/Wholesaler_____

Contractor_____

Architect/Engineer_____

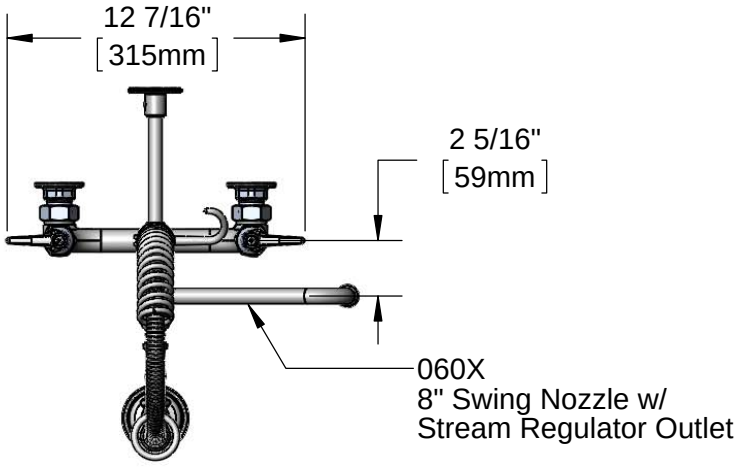

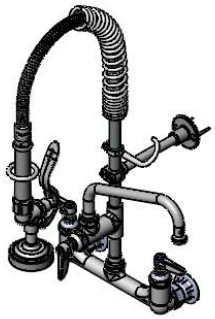

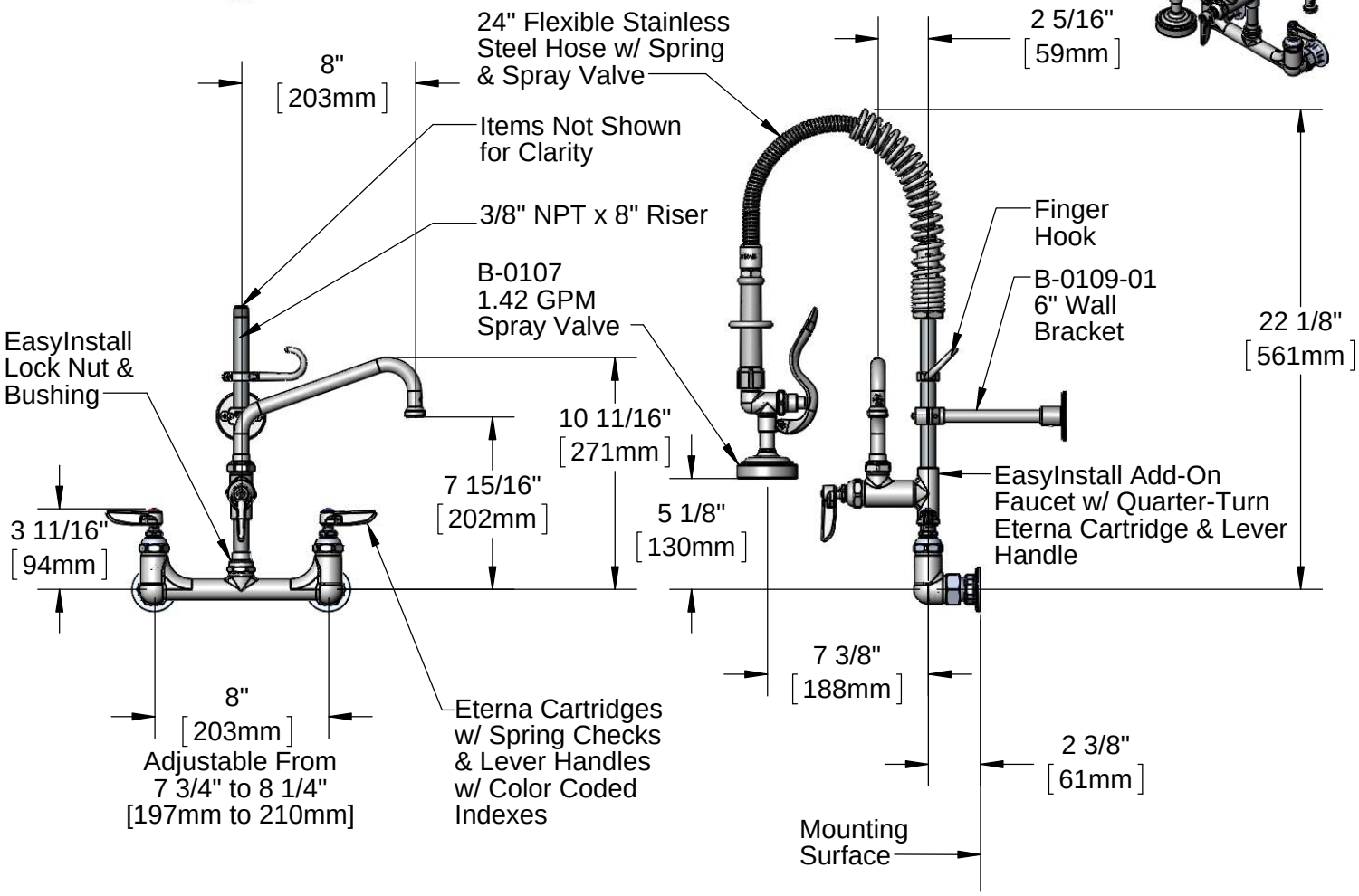

Product Specifications:

Pre-Rinse Unit: EasyInstall 8" Wall Mount Mixing Faucet, Eterna Cartridges w/ Spring Checks, Lever Handles, Add-On Faucet w/ 8" Swing Nozzle, Compact Spring, 24" Flexible Stainless Steel Hose, 1.42 GPM Spray Valve, 6" Wall Bracket & 18" Flexible Supply Hoses

Product Compliance:

ASME A112.18.1 / CSA B125.1
NSF 61 - Section 9
NSF 372 (Low Lead Content)
EPAct 2005 (PRSV)

Drawn: DHL	Checked: JRM	Approved: JHB	Date: 05/14/15	Scale: 1:8	Sheet: 1 of 2

T&S BRASS AND BRONZE WORKS, INC.

2 Saddleback Cove / P.O. Box 1088
Travelers Rest, SC 29690

Travelers Rest, SC: 800-476-4103 • Simi Valley, CA: 800-423-0150 • Fax: 864-834-3518 • www.tsbrass.com

Model No.

MPZ-8WLN-08

Item No.

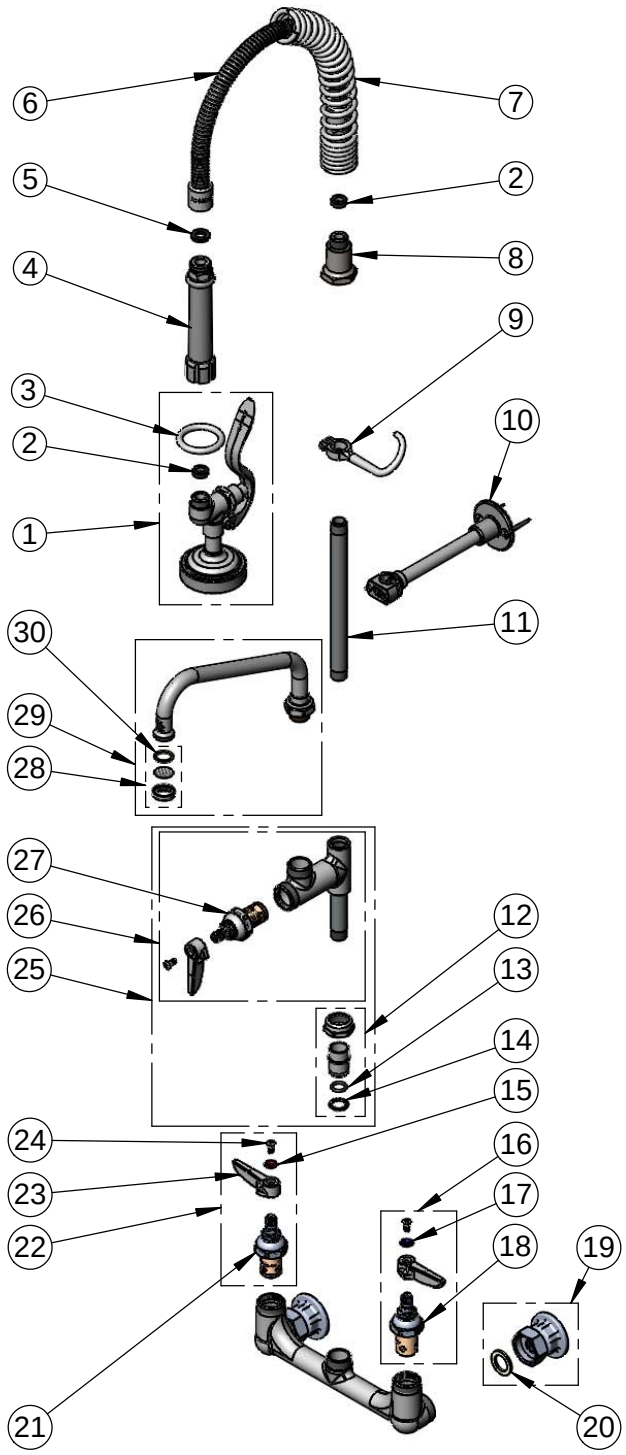

ITEM NO.	SALES NO.	DESCRIPTION
1	B-0107	1.42 GPM Spray Valve
2	010476-45	#27 Washer
3	000907-45	Spray Valve Hold Down Ring
4	002987-40	Grip Handle
5	001014-45	Washer, B-0100 Hose Barrel
6	B-0024-H2A	24" Flexible Stainless Steel Hose, Less Handle
7	016795-45	Compact Spring
8	000821-40	Spring Body
9	004R	Finger Hook
10	B-0109-01	6" Wall Bracket
11	078X	3/8" NPT x 8" Riser
12	EZ-K	EasyInstall Kit: Nut, Bushing, O-Ring & Lock Washer
13	001065-45	O-Ring
14	014200-45	Star Washer, Anti-Rotation
15	001661-45	Red Index-HW
16	002711-40	Eterna Cartridge, LTC w/ Spring Check, Handle, Index & Screw
17	001660-45	Blue Index-CW
18	012442-40	Eterna Cartridge, LTC w/ Spring Check
19	00AA	1/2" NPT Flange Assembly
20	001019-45	Coupling Nut Washer
21	012443-40	Eterna Cartridge, RTC w/ Spring Check
22	002712-40	Eterna Cartridge, RTC w/ Spring Check, Handle, Index & Screw
23	001638-45	Lever Handle
24	000922-45	Lever Handle Screw
25	B-0155-LNEZ	EasyInstall Add-On Faucet w/ Quarter-Turn Eterna Cartridge & Lever Handle, Less Nozzle
26	B-0155-LN	Add-On Faucet w/ Quarter-Turn Eterna Cartridge & Lever Handle, Less Nozzle
27	005960-40QT	Quarter-Turn Eterna Cartridge, RTC
28	B-PT	Stream Regulator Outlet
29	060X	8" Swing Nozzle
30	001048-45	Nozzle Tip Washer

Product Specifications:

Pre-Rinse Unit: EasyInstall 8" Wall Mount Mixing Faucet, Eterna Cartridges w/ Spring Checks, Lever Handles, Add-On Faucet w/ 8" Swing Nozzle, Compact Spring, 24" Flexible Stainless Steel Hose, 1.42 GPM Spray Valve, 6" Wall Bracket & 18" Flexible Supply Hoses

Product Compliance:

ASME A112.18.1 / CSA B125.1
NSF 61 - Section 9
NSF 372 (Low Lead Content)
EPAct 2005 (PRSV)

Drawn: DHL	Checked: JRM	Approved: JHB	Date: 05/14/15	Scale: NTS	Sheet: 2 of 2