T&S BRASS AND BRONZE WORKS, INC.

2 Saddleback Cove / P.O. Box 1088
Travelers Rest, SC 29690

Travelers Rest, SC: 800-476-4103 • Simi Valley, CA: 800-423-0150 • Fax: 864-834-3518 • www.tsbrass.com

Model No.
MPY-2DWV-08-CR

Item No.

For Commercial Use Only

This Space for Architect/Engineer Approval

Job Name_____Date_____

Model Specified_____ Quantity_____

Customer/Wholesaler_____

Contractor_____

Architect/Engineer_____

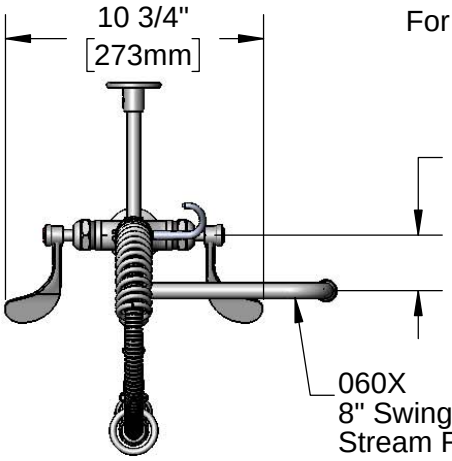

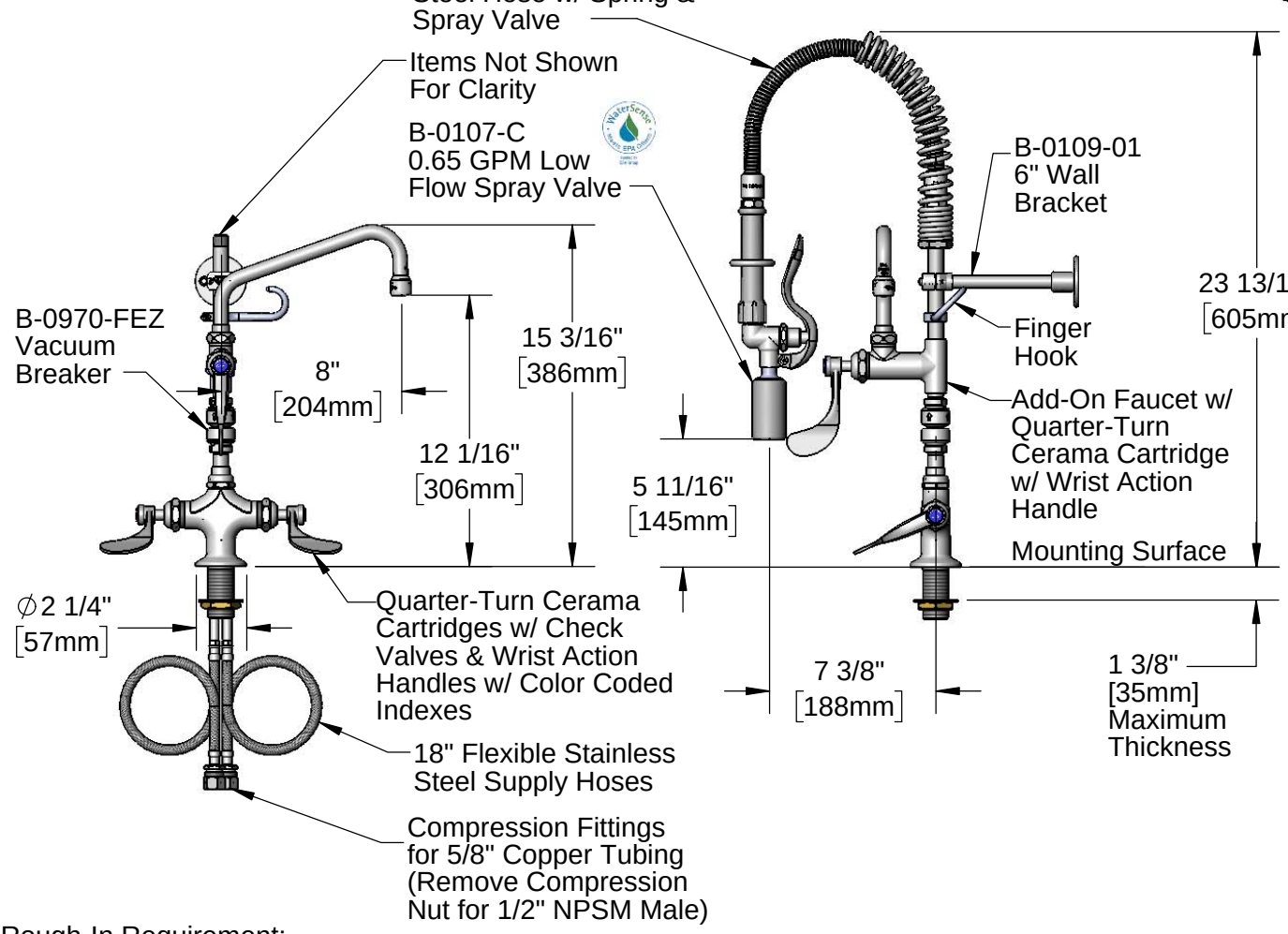

Rough-In Requirement:
∅1 1/2" [38mm] Mounting Hole

Product Specifications:

Pre-Rinse Unit: EasyInstall Single Hole Deck Mount ixing Faucet, Quarter-Turn Cerama Cartridges w/ Check Valves, Wrist Action Handles, Add-On Faucet w/ 8" Swing Nozzle, Vacuum Breaker, Compact Spring, 24" Flexible Stainless Steel Hose, 0.65 GPM Low Flow Spray Valve, 6" Wall Bracket & (2) Flexible Supply Hoses

Product Compliance:

ASME A112.18.1 / CSA B125.1
NSF 61 - Section 9
NSF 372 (Low Lead Content)
EPAct 2005 (PRSV)
EPA WaterSense (PRSV)
CSA B64.8 (VB)

Drawn: JBC	Checked: JRM	Approved: JHB	Date: 02/15/17	Scale: 1:8	Sheet: 1 of 2

T&S BRASS AND BRONZE WORKS, INC.

2 Saddleback Cove / P.O. Box 1088
Travelers Rest, SC 29690

Travelers Rest, SC: 800-476-4103 • Simi Valley, CA: 800-423-0150 • Fax: 864-834-3518 • www.tsbrass.com

Model No.
MPY-2DWV-08-CR

Item No.

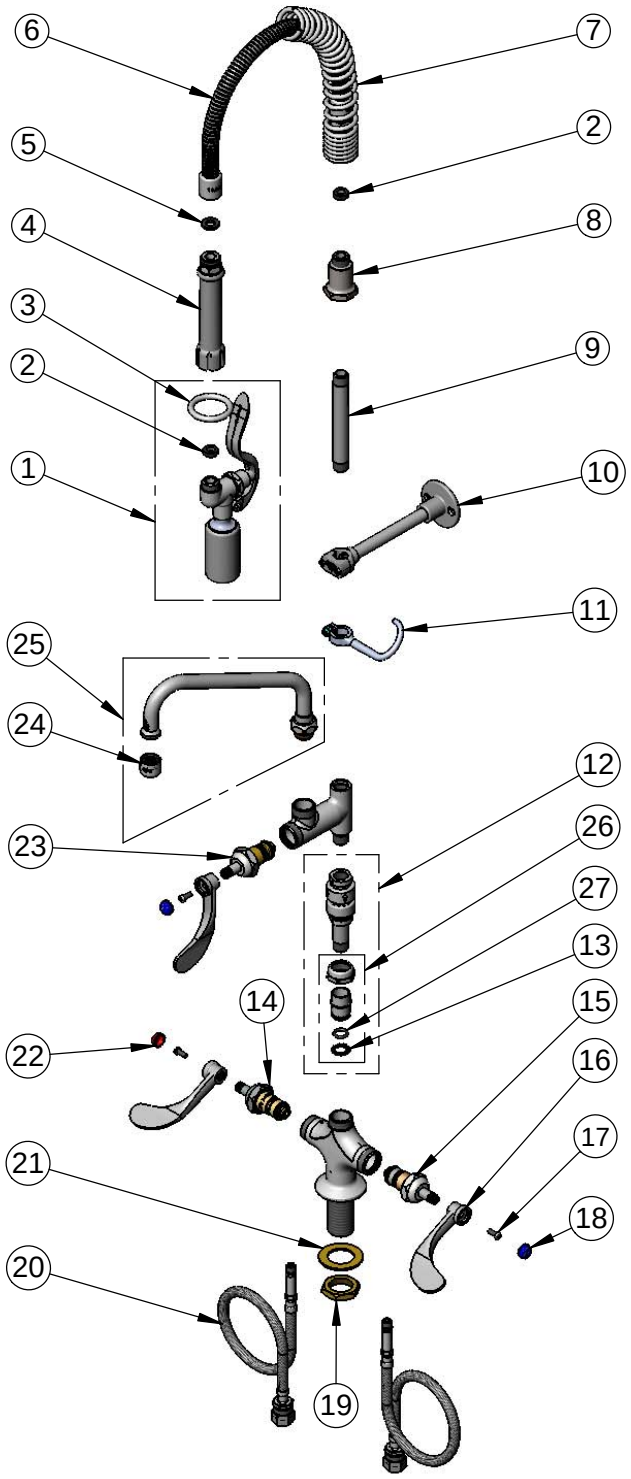

ITEM NO.	SALES NO.	DESCRIPTION
1	B-0107-C	0.65 GPM Low Flow Spray Valve
2	010476-45	#27 Washer
3	000907-45	Spray Valve Hold Down Ring
4	002987-40	Grip Handle
5	001014-45	Washer, B-0100 Hose Barrel
6	B-0024-H2A	24" Flexible Stainless Steel Hose, Less Handle
7	016795-45	Compact Spring
8	000821-40	Spring Body
9	001617-40	3/8" NPT X 5-3/16" Riser
10	B-0109-01	6" Wall Bracket
11	004R	Finger Hook
12	B-0970-FEZ	EasyInstall Vacuum Breaker
13	014200-45	Star Washer, Anti-Rotation
14	012394-25	Quarter-Turn Cerama Cartridge, RTC w/ Check Valve
15	012395-25	Quarter-Turn Cerama Cartridge, LTC w/ Check Valve
16	B-WH4	4" Wrist Action Handle
17	000925-45	Lab Handle Screw
18	001686-45	Blue Index - CW
19	000965-45	Lock Nut
20	012534-45	18" Flexible Supply Hose (2)
21	002290-45	Lock Washer
22	001194-45	Red Index - HW
23	011278-25	Quarter-Turn Cerama Cartridge, RTC
24	B-PT	Stream Regulator Outlet
25	060X	8" Swing Nozzle
26	EZ-K	EasyInstall Kit: Nut, Bushing, O-Ring & Lock Washer
27	001065-45	O-Ring

Product Specifications:

Pre-Rinse Unit: EasyInstall Single Hole Deck Mount ixing Faucet, Quarter-Turn Cerama Cartridges w/ Check Valves, Wrist Action Handles, Add-On Faucet w/ 8" Swing Nozzle, Vacuum Breaker, Compact Spring, 24" Flexible Stainless Steel Hose, 0.65 GPM Low Flow Spray Valve, 6" Wall Bracket & (2) Flexible Supply Hoses

Product Compliance:

ASME A112.18.1 / CSA B125.1
NSF 61 - Section 9
NSF 372 (Low Lead Content)
EPAct 2005 (PRSV)
EPA WaterSense (PRSV)
CSA B64.8 (VB)

Drawn: JBC	Checked: JRM	Approved: JHB	Date: 02/15/17	Scale: NTS	Sheet: 2 of 2