T&S BRASS AND BRONZE WORKS, INC.

2 Saddleback Cove / P.O. Box 1088
Travelers Rest, SC 29690

Travelers Rest, SC: 800-476-4103 • Simi Valley, CA: 800-423-0150 • Fax: 864-834-3518 • www.tsbrass.com

Model No.
MPM-8WLN-12-SWV

Item No.

For Commercial Use Only

This Space for Architect/Engineer Approval

Job Name_____Date_____

Model Specified_____ Quantity_____

Customer/Wholesaler_____

Contractor_____

Architect/Engineer_____

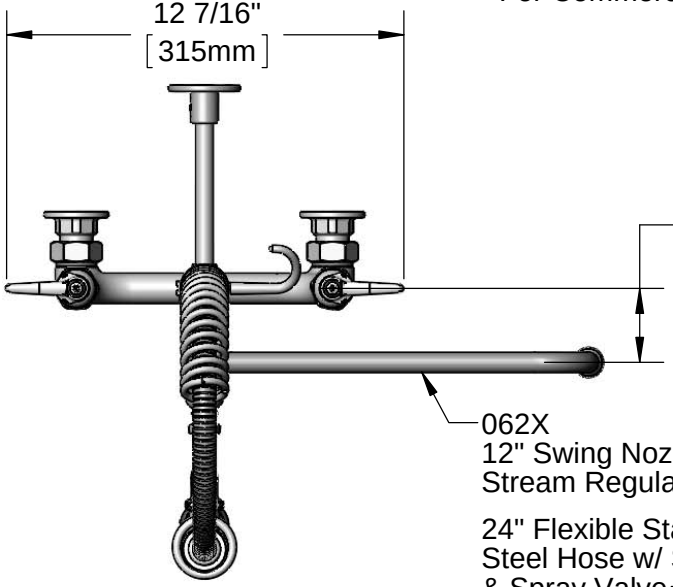

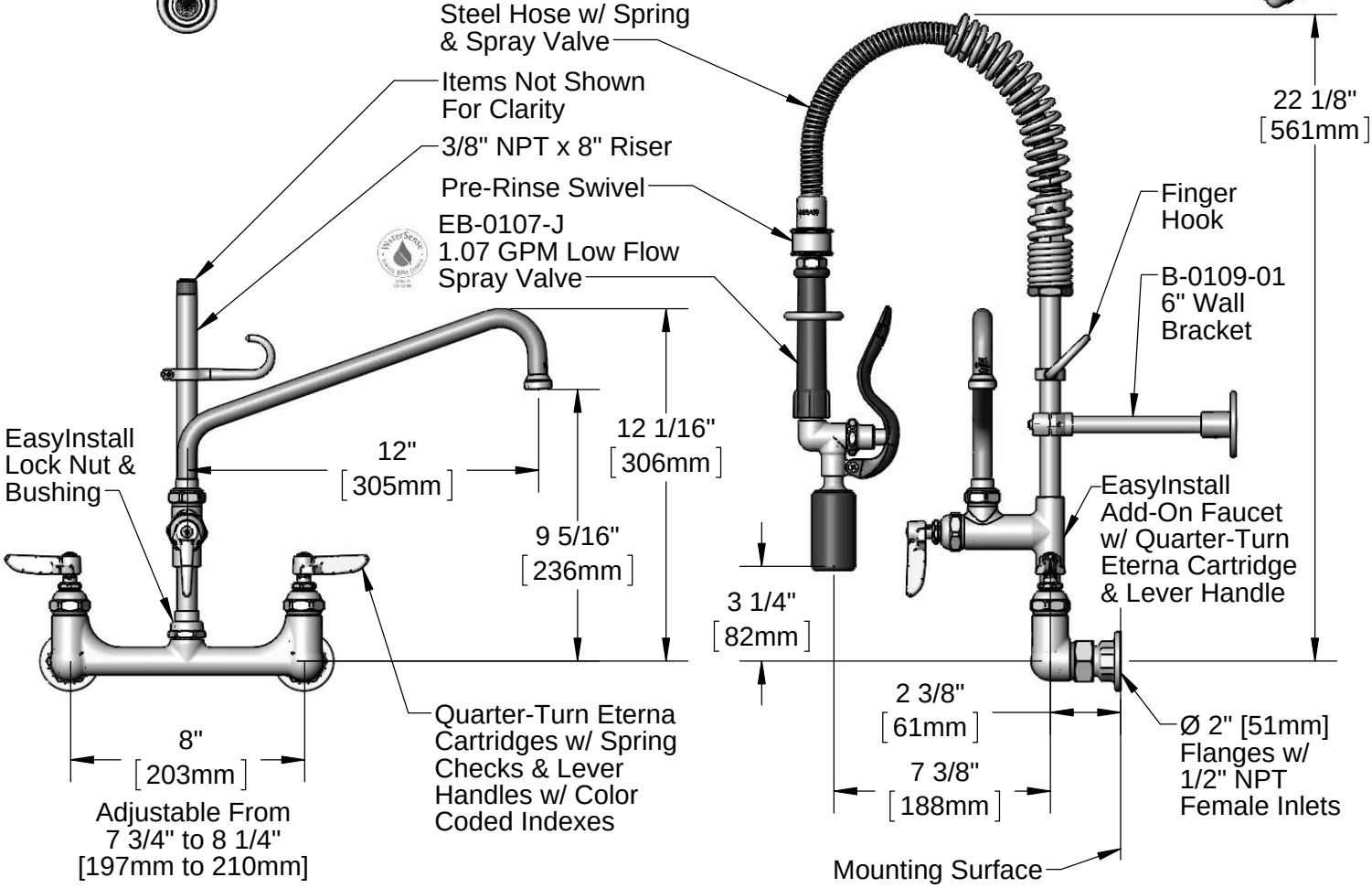

Product Specifications:

Pre-Rinse Unit: EasyInstall 8" Wall Mount Mixing Faucet, Quarter-Turn Eterna Cartridges w/ Spring Checks, Lever Handles, Add-On Faucet w/ 12" Swing Nozzle, Compact Spring, 24" Flexible Stainless Steel Hose, 1.07 GPM Low Flow Spray Valve w/ Pre-Rinse Swivel, 6" Wall Bracket & 1/2" NPT Female Inlets

Product Compliance:

ASME A112.18.1 / CSA B125.1
NSF 61 - Section 9
NSF 372 (Low Lead Content)
EPAct 2005 (PRSV)
EPA WaterSense (PRSV)

Drawn: KJG	Checked: DHL	Approved: JHB	Date: 10/20/15	Scale: 1:6	Sheet: 1 of 1

T&S BRASS AND BRONZE WORKS, INC.

2 Saddleback Cove / P.O. Box 1088
Travelers Rest, SC 29690

Travelers Rest, SC: 800-476-4103 • Simi Valley, CA: 800-423-0150 • Fax: 864-834-3518 • www.tsbrass.com

Model No.
MPM-8WLN-12-SWV

Item No.

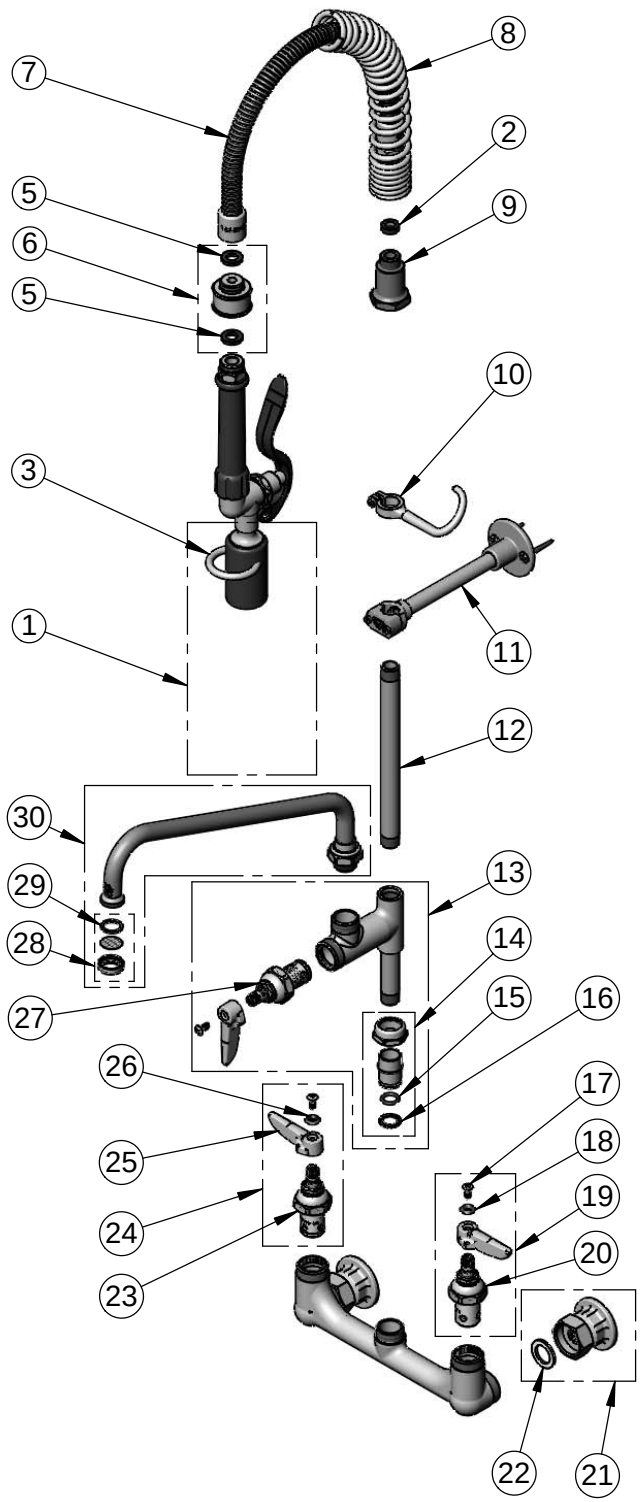

ITEM NO.	SALES NO.	DESCRIPTION
1	EB-0107-J	1.07 GPM Spray Valve (Blue)
2	010476-45	#27 Washer
3	000907-45	Spray Valve Hold Down Ring
4	011482-40	Grip Handle (Blue)
5	001014-45	Washer, B-0100 Hose Barrel
6	018200-40	Pre-Rinse Swivel
7	B-0024-H2A	24" Flexible Stainless Steel Hose, Less Handle
8	016795-45	Compact Spring
9	000821-40	Spring Body
10	004R	Finger Hook
11	B-0109-01	6" Wall Bracket
12	078X	3/8" NPT x 8" Riser
13	B-0155-LNEZ	EasyInstall Add-On Faucet, Less Nozzle
14	EZ-K	EasyInstall Kit: Nut, Bushing, O-Ring & Lock Washer
15	001065-45	O-Ring
16	014200-45	Star Washer, Anti-Rotation
17	000922-45	Lever Handle Screw
18	001660-45	Blue Index-CW
19	002711-40	Quarter-Turn Eterna Cartridge, LTC w/ Spring Check, Handle, Index & Screw
20	012442-40	Quarter-Turn Eterna Cartridge, LTC w/ Spring Check
21	00AA	1/2" NPT Female Eccentric Flange
22	001019-45	Coupling Nut Washer
23	012443-40	Quarter-Turn Eterna Cartridge, RTC w/ Spring Check
24	002712-40	Quarter-Turn Eterna Cartridge, RTC w/ Spring Check, Handle, Index & Screw
25	001638-45	Lever Handle
26	001661-45	Red Index-HW
27	005960-40QT	Quarter-Turn Eterna Cartridge, RTC
28	B-PT	Stream Regulator Outlet
29	001048-45	Nozzle Tip Washer
30	062X	12" Swing Nozzle

Product Specifications:

Pre-Rinse Unit: EasyInstall 8" Wall Mount Mixing Faucet, Quarter-Turn Eterna Cartridges w/ Spring Checks, Lever Handles, Add-On Faucet w/ 12" Swing Nozzle, Compact Spring, 24" Flexible Stainless Steel Hose, 1.07 GPM Low Flow Spray Valve w/ Pre-Rinse Swivel, 6" Wall Bracket & 1/2" NPT Female Inlets

Product Compliance:

ASME A112.18.1 / CSA B125.1
NSF 61 - Section 9
NSF 372 (Low Lead Content)
EPAct 2005 (PRSV)
EPA WaterSense (PRSV)

Drawn: KJG	Checked: DHL	Approved: JHB	Date: 10/20/15	Scale: NTS	Sheet: 2 of 2