This Space for Architect/Engineer Approval

Job Name_____Date_____

Model Specified_____ Quantity_____

Customer/Wholesaler_____

Contractor_____

Architect/Engineer_____

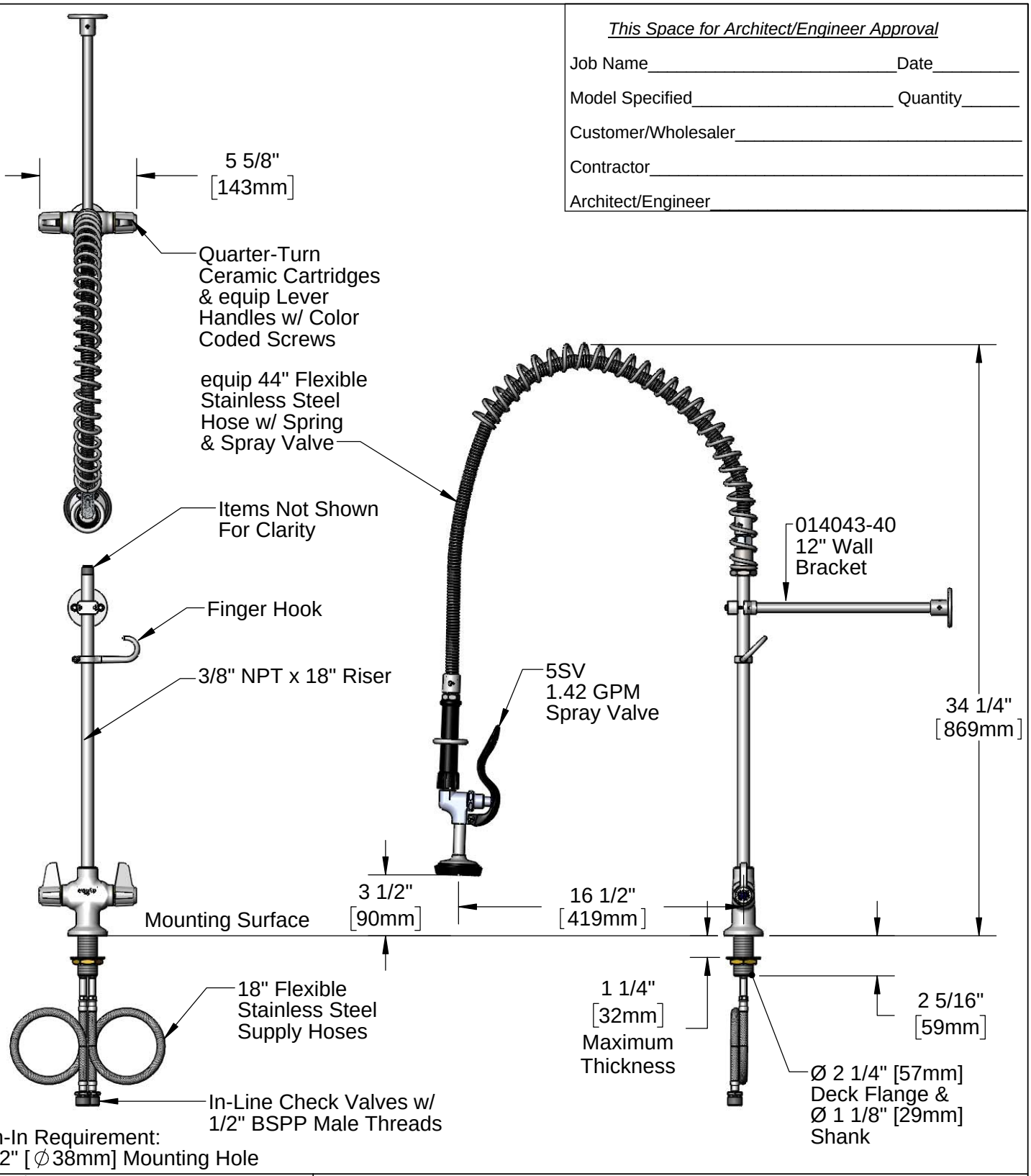

Rough-In Requirement:
∅1 1/2" [∅38mm] Mounting Hole

Model Number

5PR-2S00-12WB

Product Compliance:

ASME A112.18.1 / CSA B125.1
NSF 61 - Section 9
NSF 372 (Low Lead Content)
EPAct 2005 (PRSV)

Product Specifications:

Pre-Rinse Unit: Single Hole Deck Mount Mixing Faucet, Ceramic Cartridges, 12" Wall Bracket, 1.42 GPM Spray Valve, 1/2" BSPP In-Line Check Valves & Flexible Supply Hoses

equip Foodservice Accessories

equip by TS

2 Saddleback Cove, P.O. Box 1088
Travelers Rest, South Carolina 29690
Phone: 800.891.4808 Fax: 800.868.0084
equip.tsbrass.com

Drawn: JBC	Checked: JRM	Approved: JHB	Date: 02/15/17	Scale: 1:8	Sheet: 1 of 2

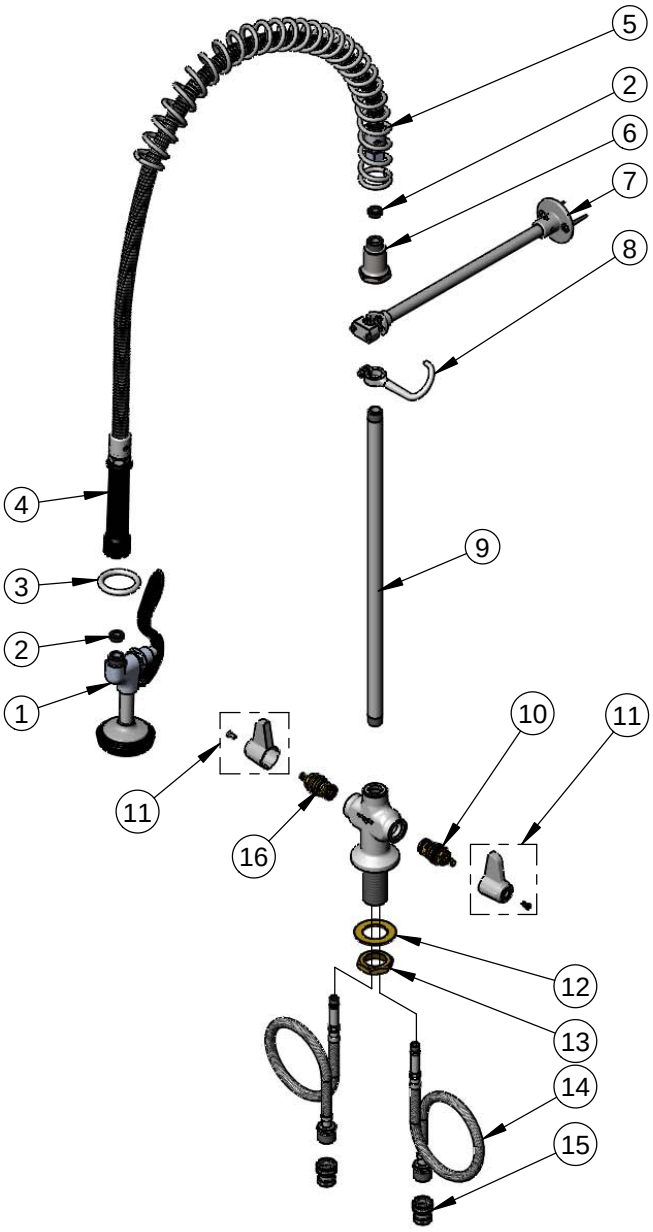

ITEM NO.	SALES NO.	DESCRIPTION
1	5SV	equip Spray Valve
2	010476-45	#27 Washer
3	000907-45	Spray Valve Hold Down Ring
4	5HSE44	equip 44" Flexible Stainless Steel Hose (Includes Washer)
5	014068-45	Overhead Spring
6	000821-40	Spring Body
7	014043-40	12" Wall Bracket
8	004R	Finger Hook
9	000369-40	3/8" NPT x 18" Riser
10	013788-45	equip Quarter-Turn Ceramic Cartridge, LTC
11	5-HDL-L	equip Lever Handle w/ Color Coded Screws
12	002290-45	Lock Washer
13	000965-45	Lock Nut
14	012534-45	18" Flexible Supply Hose (2)
15	010321-45	1/2" BSPP In-Line Check Valve
16	013787-45	equip Quarter-Turn Ceramic Cartridge, RTC

Model Number

5PR-2S00-12WB

Product Compliance:

ASME A112.18.1 / CSA B125.1
NSF 61 - Section 9
NSF 372 (Low Lead Content)
EPAct 2005 (PRSV)

Product Specifications:

Pre-Rinse Unit: Single Hole Deck Mount Mixing Faucet, Ceramic Cartridges, 12" Wall Bracket, 1.42 GPM Spray Valve, 1/2" BSPP In-Line Check Valves & Flexible Supply Hoses

equip Foodservice Accessories

equip by TSB

2 Saddleback Cove, P.O. Box 1088
Travelers Rest, South Carolina 29690
Phone: 800.891.4808 Fax: 800.868.0084
equip.tsbrass.com

Drawn: JBC	Checked: JRM	Approved: JHB	Date: 02/15/17	Scale: NTS	Sheet: 2 of 2