ADA Compliant

This Space for Architect/Engineer Approval

Job Name_____Date_____

Model Specified_____ Quantity_____

Customer/Wholesaler_____

Contractor_____

Architect/Engineer_____

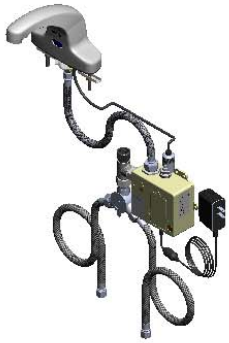

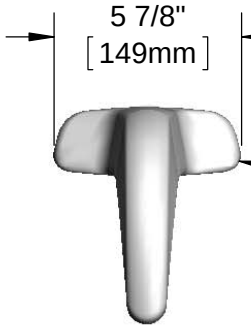

Polish Chrome Plated Cast Spout w/ B-0199-09-WS 1.5 GPM Vandal Resistant Aerator & Key

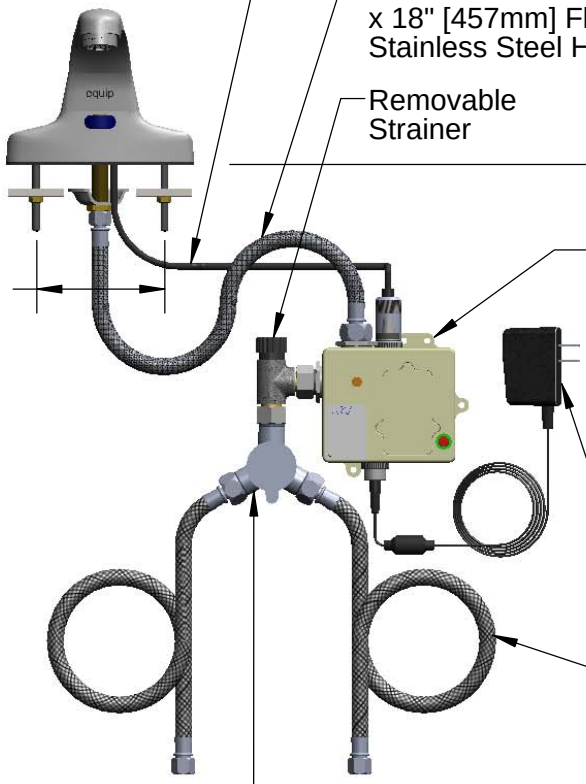

24" [610mm] Sensor Cable

1/2" NPSM x 1/4" NPSM x 18" [457mm] Flexible Stainless Steel Hose

Removable Strainer

3 5/8" x 4 3/16" x 2" Deep [92mm x 106mm x 51mm] Water Resistant Control ModuleBox (White), AC or DC Operatedw/ (4) AA Batteries

100-240 VAC Adapter w/ 71" [1800mm] Power Cord. (Remove Rubber Plugs in Module to Connect.)

(2) 3/8" Compression x 1/2" NPSM 18" [457mm] Flexible Stainless Steel Supply Hoses

Mechanical Mixing Valve w/ Check Valves

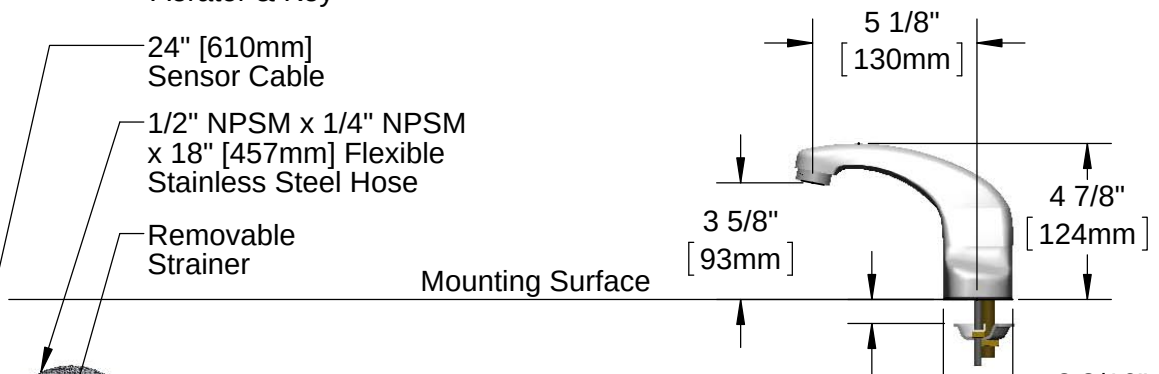

Rough-In Requirement:
(1) ∅1" [25mm] Center Shank Mounting Hole
(2) ∅1/2" [13mm] Mounting Stud Holes on 4" [102mm] Centers

Model Number	Product Specifications:
5EF-2D-DS-WS	Electronic Faucet: 4" Deck Mount Cast Spout Faucet, VR 1.5 GPM Aerator, AC-DC Control Module, Temperature Control Mixing Valve, Check Valves & (2) 18" Flexible Supply Hoses
Product Compliance: ASME A112.18.1 / CSA B125.1 NSF 61 - Section 9 NSF 372 (Low Lead Content) ANSI A117.1 (ADA) UL 1951	equip Foodservice Accessories equip by TSB 2 Saddleback Cove, P.O. Box 1088 Travelers Rest, South Carolina 29690 Phone: 800.891.4808 Fax: 800.868.0084 equip.tsbrass.com

Drawn: KJG	Checked: GEF	Approved: JHB	Date: 08/26/16	Scale: 1:6	Sheet: 1 of 2

ITEM NO.	SALES NO.	DESCRIPTION
1	015425-45	Vandal Resistant Key
2	B-0199-09-WS	VR 1.5 GPM Aerator, 15/16-27 UN Male w/ Key
3	5EF-0003	24" Sensor Cable
4	016297-45	Inlet Hose, Faucet, 1/2" NPSM-F x 1/4" NPSM-F
5	5EF-0001	equip Sensor Faucet Control Module
6	5EF-0002	equip AC Transformer, 100-240 VAC
7	5EF-0005	Supply Hose, 9/16-24 Female x 1/2" NPSM
8	5EF-0006	Mechanical Mixing Valve
9	5EF-FILTER	Replacement Filter

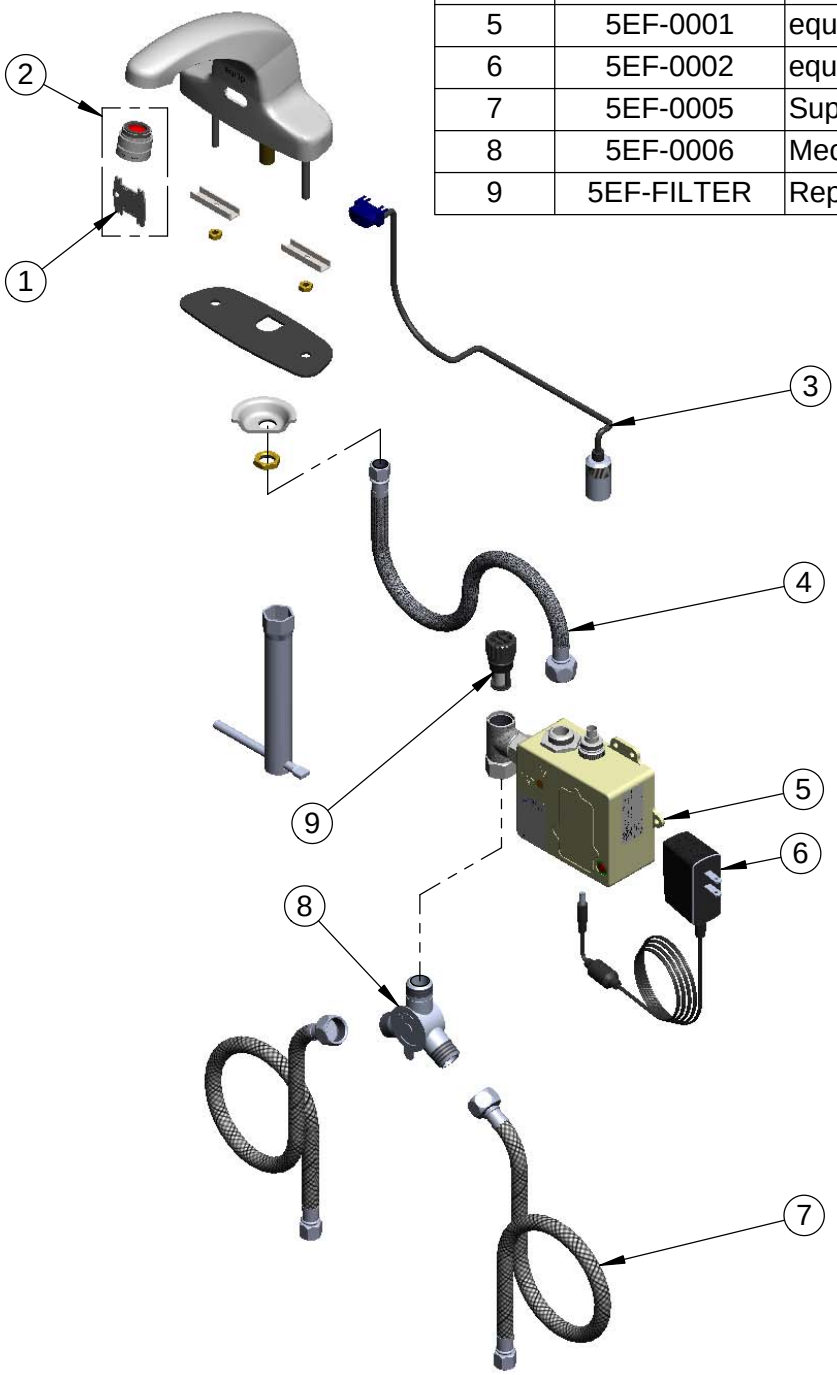

Model Number

5EF-2D-DS-WS

Product Specifications:

Electronic Faucet: 4" Deck Mount Cast Spout Faucet, VR 1.5 GPM Aerator, AC-DC Control Module, Temperature Control Mixing Valve, Check Valves & (2) 18" Flexible Supply Hoses

Product Compliance:

ASME A112.18.1 / CSA B125.1
NSF 61 - Section 9
NSF 372 (Low Lead Content)
ANSI A117.1 (ADA)
UL 1951

equip Foodservice Accessories

equip by TS

2 Saddleback Cove, P.O. Box 1088
Travelers Rest, South Carolina 29690
Phone: 800.891.4808 Fax: 800.868.0084
equip.tsbrass.com

Drawn: KJG	Checked: GEF	Approved: JHB	Date: 08/26/16	Scale: NTS	Sheet: 2 of 2