T&S BRASS AND BRONZE WORKS, INC.

2 Saddleback Cove / P.O. Box 1088
Travelers Rest, SC 29690

Travelers Rest, SC: 800-476-4103 • Simi Valley, CA: 800-423-0150 • Fax: 864-834-3518 • www.tsbrass.com

Model No.

BL-5735-02

Item No.

This Space for Architect/Engineer Approval

Job Name_____Date_____

Model Specified_____ Quantity_____

Customer/Wholesaler_____

Contractor_____

Architect/Engineer_____

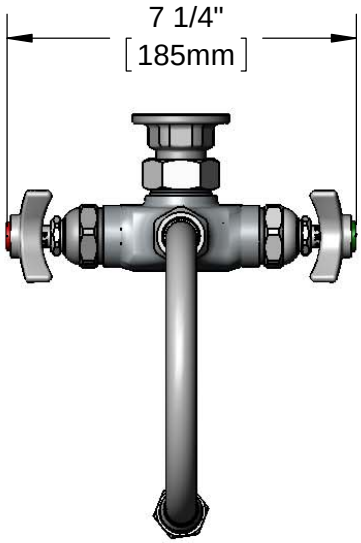

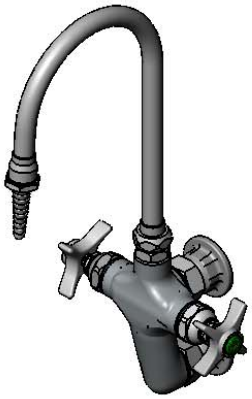

ADA Compliant

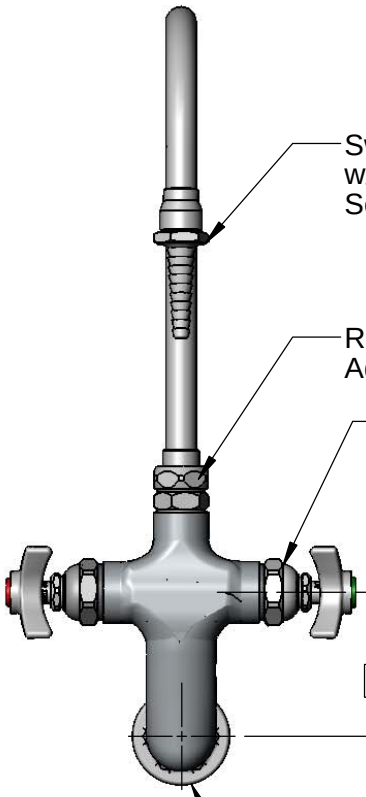

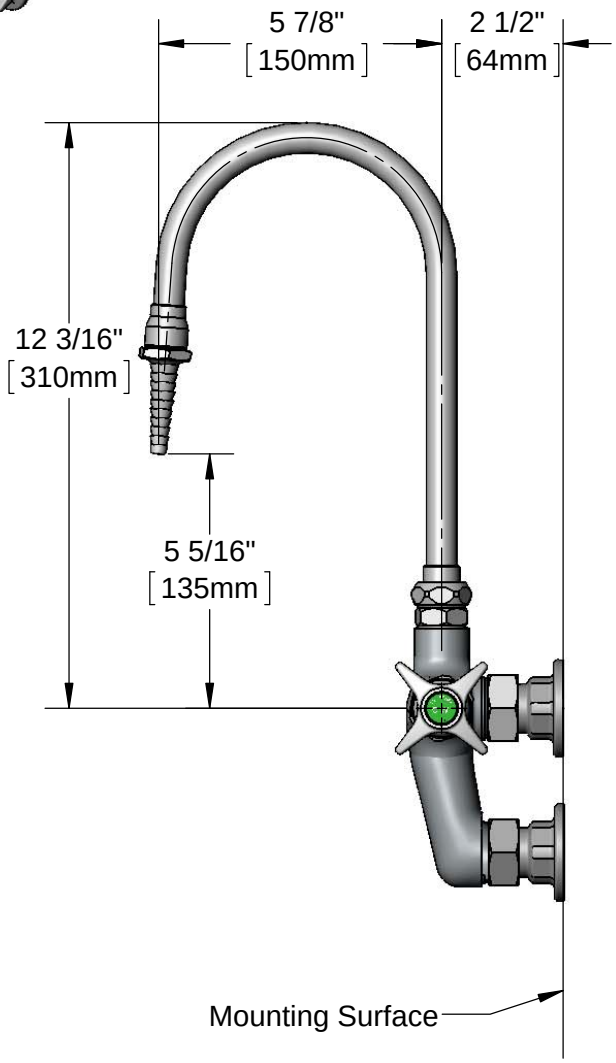

Product Specifications:

Wall Mount Mixing Faucet, Eterna Cartridges, Swivel Gooseneck w/ Serrated Tip, Rigid to Swivel Adapter, 4-Arm Lab Handles and 1/2" NPT Female Adjustable Inlets

Product Compliance:

ASME A112.18.1 / CSA B125.1
NSF 61 - Section 9
NSF 372 (Low Lead Content)
ANSI A117.1 (ADA)

Drawn: JBC	Checked: JRM	Approved: JHB	Date: 02/01/17	Scale: 1:4	Sheet: 1 of 2

T&S BRASS AND BRONZE WORKS, INC.

2 Saddleback Cove / P.O. Box 1088
Travelers Rest, SC 29690

Travelers Rest, SC: 800-476-4103 • Simi Valley, CA: 800-423-0150 • Fax: 864-834-3518 • www.tsbrass.com

Model No.

BL-5735-02

Item No.

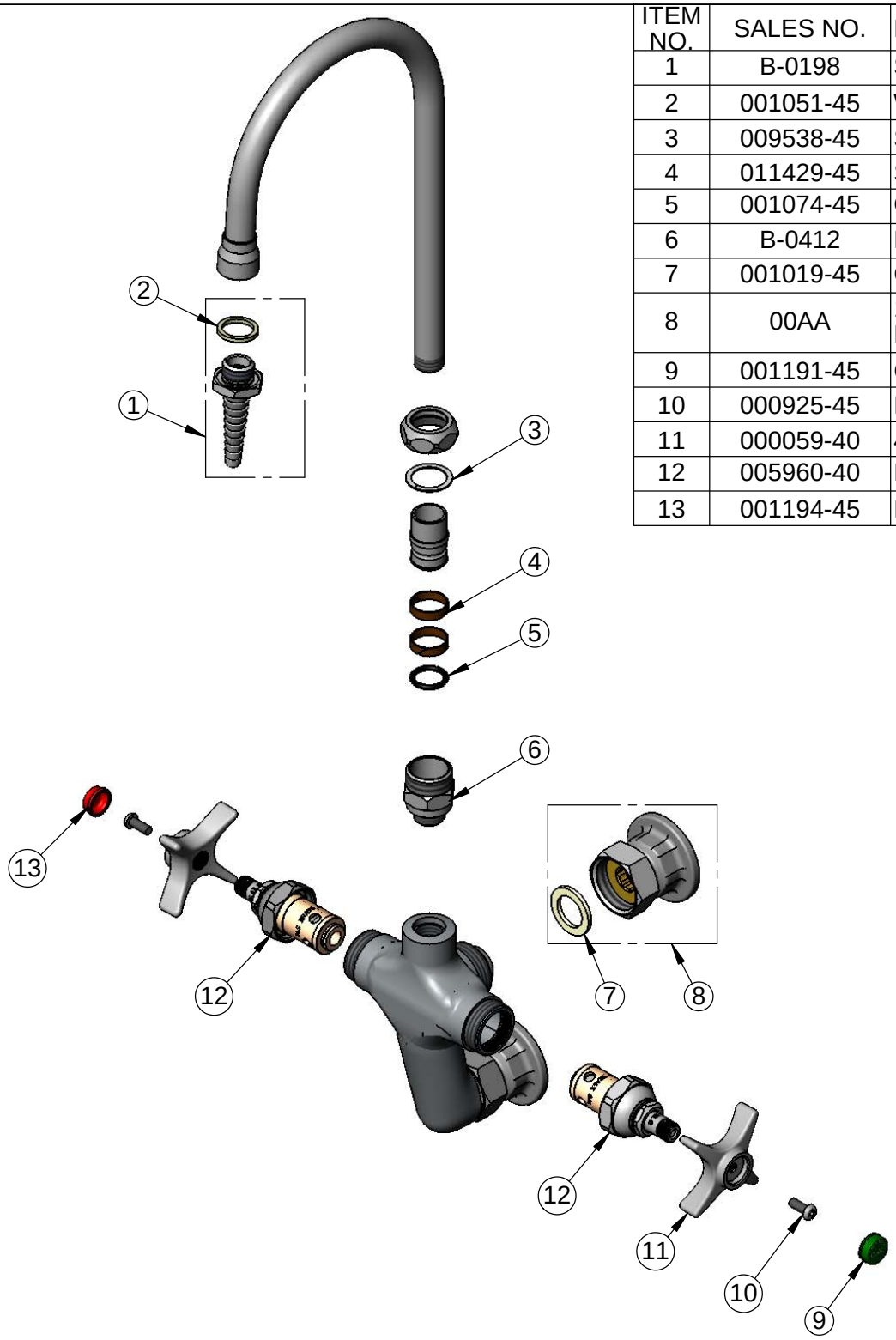

ITEM NO.	SALES NO.	DESCRIPTION
1	B-0198	Serrated Tip w/ Washer
2	001051-45	Washer
3	009538-45	Swivel Washer
4	011429-45	Swivel Sleeves (2)
5	001074-45	O-Ring
6	B-0412	Rigid to Swivel Adapter
7	001019-45	Coupling Nut Washer
8	00AA	1/2" NPT Female Eccentric Flange
9	001191-45	Green Index - CW
10	000925-45	Lab Handle Screw
11	000059-40	4-Arm Lab Handle
12	005960-40	Eterna Cartridge, RTC
13	001194-45	Red Index - HW

Product Specifications:

Wall Mount Mixing Faucet, Eterna Cartridges, Swivel Gooseneck w/ Serrated Tip, Rigid to Swivel Adapter, 4-Arm Lab Handles and 1/2" NPT Female Adjustable Inlets

Product Compliance:

ASME A112.18.1 / CSA B125.1
NSF 61 - Section 9
NSF 372 (Low Lead Content)
ANSI A117.1 (ADA)

Drawn: JBC	Checked: JRM	Approved: JHB	Date: 02/01/17	Scale: NTS	Sheet: 2 of 2