T&S BRASS AND BRONZE WORKS, INC.

2 Saddleback Cove / P.O. Box 1088
Travelers Rest, SC 29690

Travelers Rest, SC: 800-476-4103 • Simi Valley, CA: 800-423-0150 • Fax: 864-834-3518 • www.tsbrass.com

Model No.

BL-5710-03

Item No.

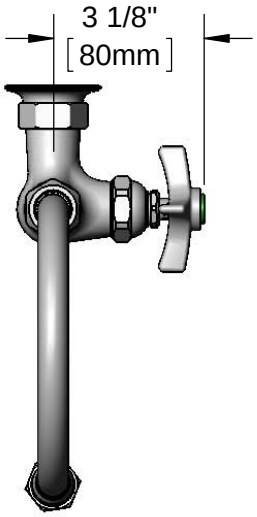

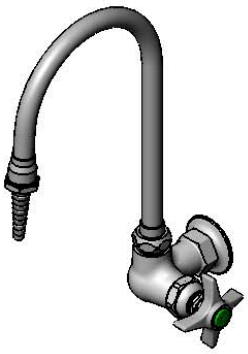

This Space for Architect/Engineer Approval

Job Name_____Date_____

Model Specified_____ Quantity_____

Customer/Wholesaler_____

Contractor_____

Architect/Engineer_____

ADA Compliant

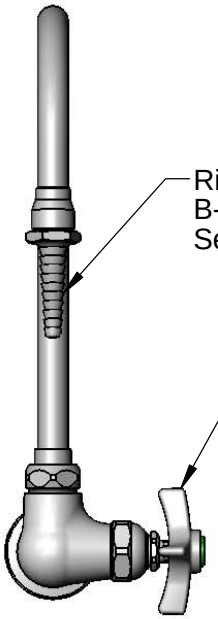

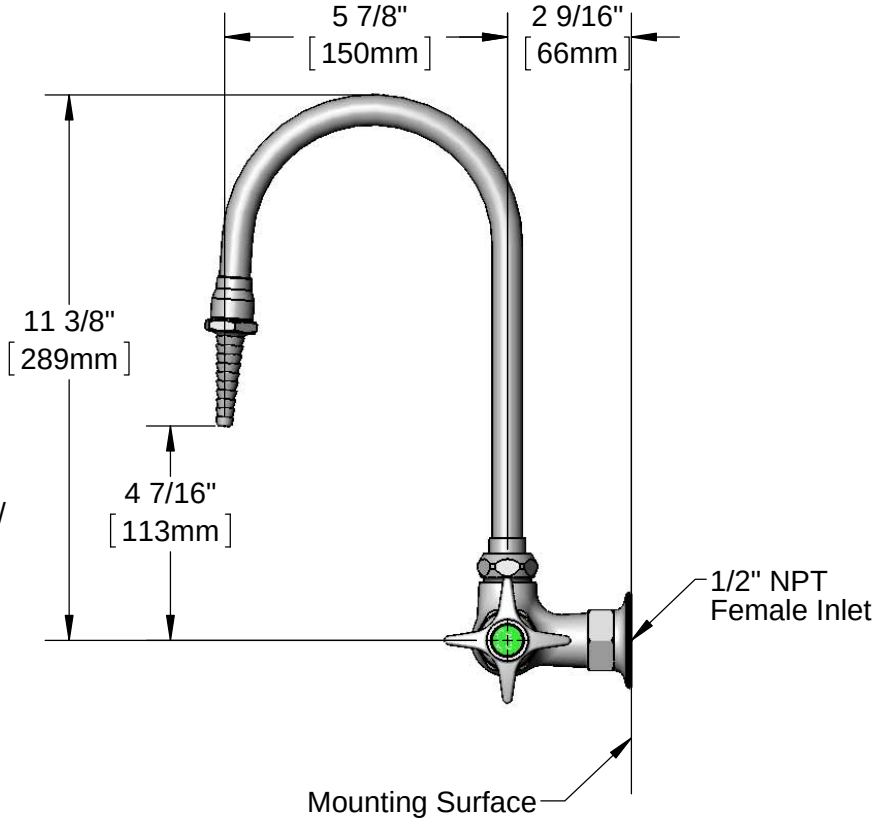

Product Specifications:

Single Hole Single Temperature Wall Mount Laboratory Faucet, Eterna Cartridge, 4-Arm Lab Handle, Swivel Gooseneck, Serrated Tip & 1/2" NPT Female Inlet

Product Compliance:

ASME A112.18.1 / CSA B125.1
NSF 61 - Section 9
NSF 372 (Low Lead Content)
ANSI A117.1 (ADA)

Drawn: JBC	Checked: JRM	Approved: JHB	Date: 01/26/17	Scale: 1:4	Sheet: 1 of 2

T&S BRASS AND BRONZE WORKS, INC.

2 Saddleback Cove / P.O. Box 1088
Travelers Rest, SC 29690

Travelers Rest, SC: 800-476-4103 • Simi Valley, CA: 800-423-0150 • Fax: 864-834-3518 • www.tsbrass.com

Model No.

BL-5710-03

Item No.

ITEM NO.	SALES NO.	DESCRIPTION
1	B-0198	Serrated Tip w/ Washer
2	001051-45	Washer
3	005960-40	Eterna Cartridge, RTC
4	000059-40	4-Arm Lab Handle
5	000925-45	Lab Handle Screw
6	001191-45	Green Index - CW

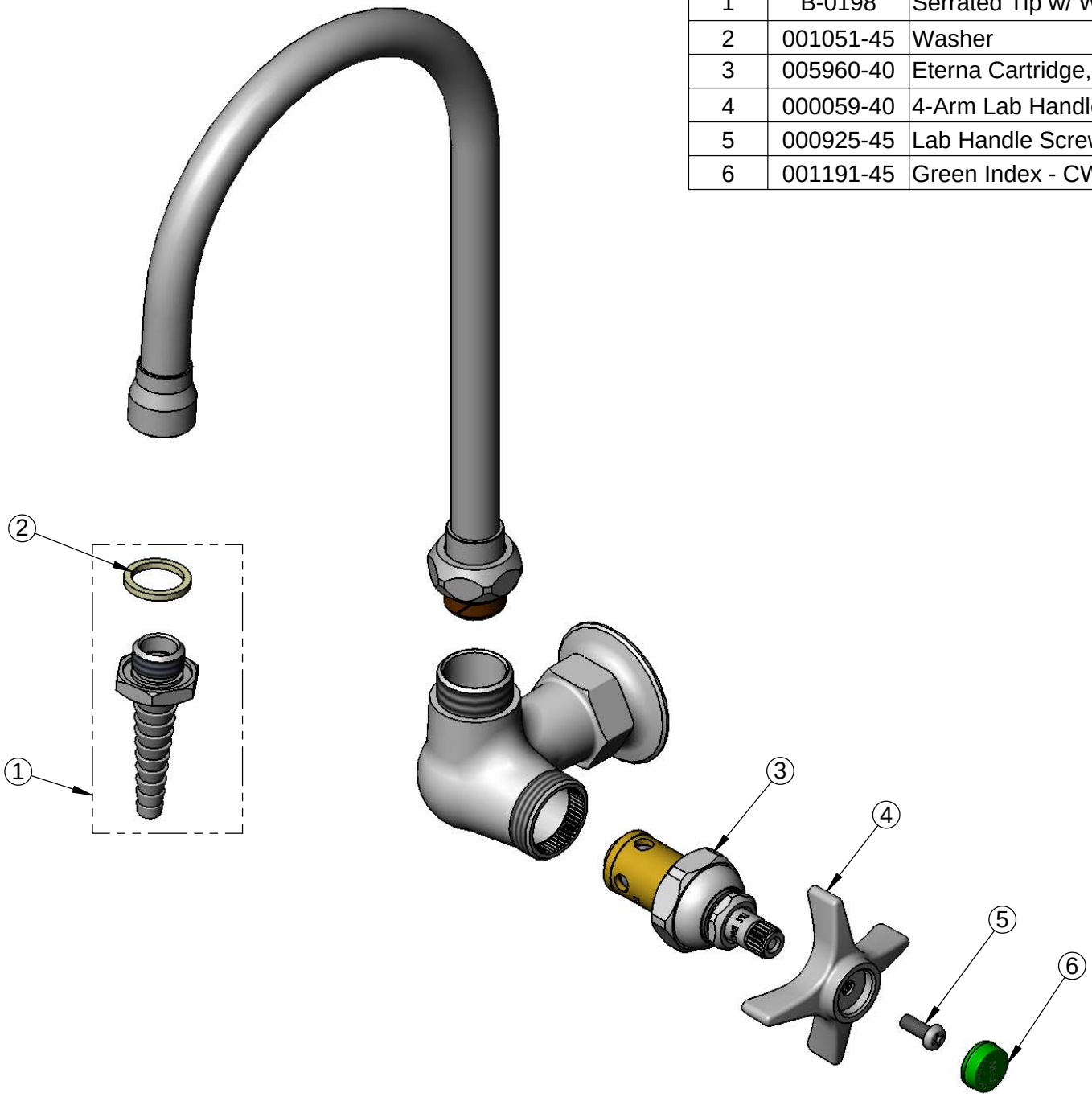

Product Specifications:

Single Hole Single Temperature Wall Mount Laboratory Faucet, Eterna Cartridge, 4-Arm Lab Handle, Swivel Gooseneck, Serrated Tip & 1/2" NPT Female Inlet

Product Compliance:

ASME A112.18.1 / CSA B125.1
NSF 61 - Section 9
NSF 372 (Low Lead Content)
ANSI A117.1 (ADA)

Drawn: JBC	Checked: JRM	Approved: JHB	Date: 01/26/17	Scale: NTS	Sheet: 2 of 2