T&S BRASS AND BRONZE WORKS, INC.

2 Saddleback Cove / P.O. Box 1088
Travelers Rest, SC 29690

Travelers Rest, SC: 800-476-4103 • Simi Valley, CA: 800-423-0150 • Fax: 864-834-3518 • www.tsbrass.com

Model No.

BL-5704-04

Item No.

ADA Compliant

This Space for Architect/Engineer Approval

Job Name_____Date_____

Model Specified_____ Quantity_____

Customer/Wholesaler_____

Contractor_____

Architect/Engineer_____

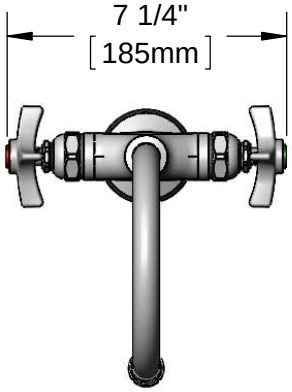

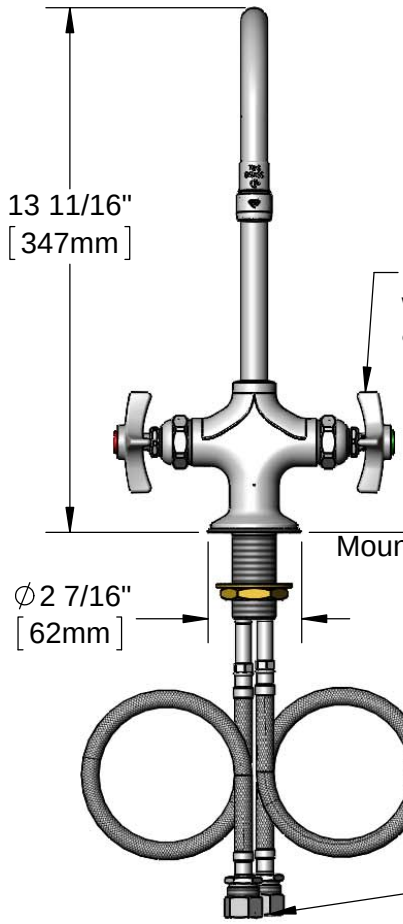

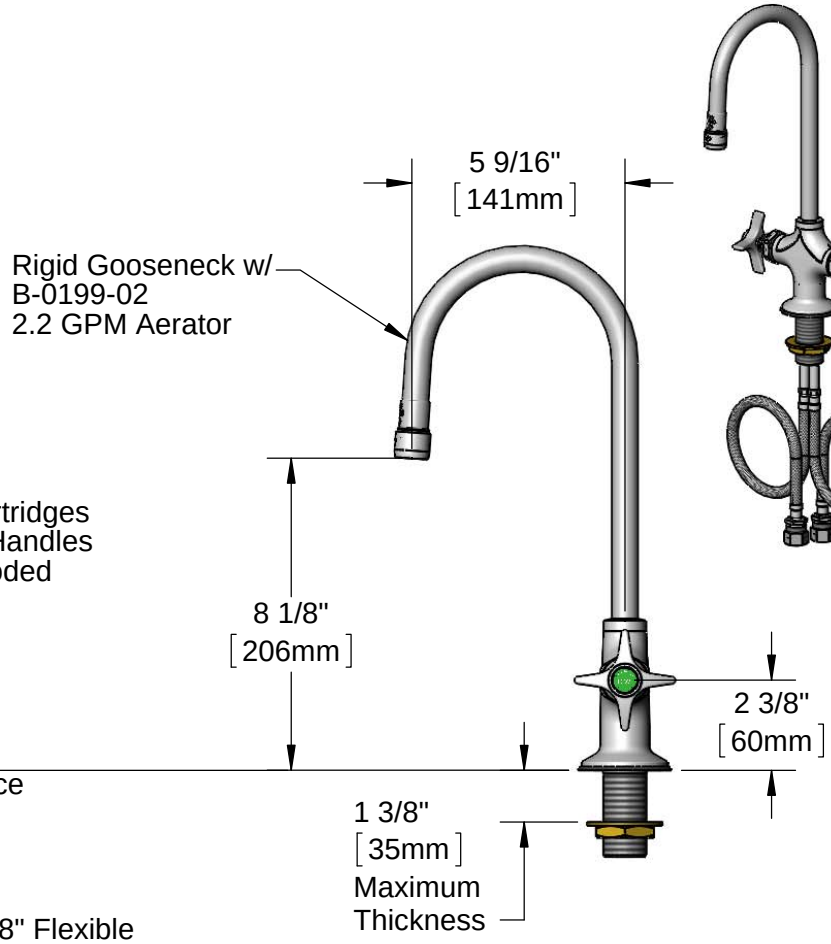

Rough-In Requirement:
Ø 1 1/2" [38mm] Mounting Hole

Product Specifications:

Single Hole Deck Mount Mixing Faucet w/ Eterna Cartridges, 4-Arm Handles, Rigid Gooseneck, 2.2 GPM Aerator & 18" Flexible Stainless Steel Supply Hoses w/ 1/2" NPSM Male Inlets

Product Compliance:

ASME A112.18.1 / CSA B125.1
NSF 61 - Section 9
NSF 372 (Low Lead Content)
ANSI A117.1 (ADA)

Drawn: JBC	Checked: JRM	Approved: JHB	Date: 02/01/17	Scale: 1:5	Sheet: 1 of 2

T&S BRASS AND BRONZE WORKS, INC.

2 Saddleback Cove / P.O. Box 1088
Travelers Rest, SC 29690

Travelers Rest, SC: 800-476-4103 • Simi Valley, CA: 800-423-0150 • Fax: 864-834-3518 • www.tsbrass.com

Model No.

BL-5704-04

Item No.

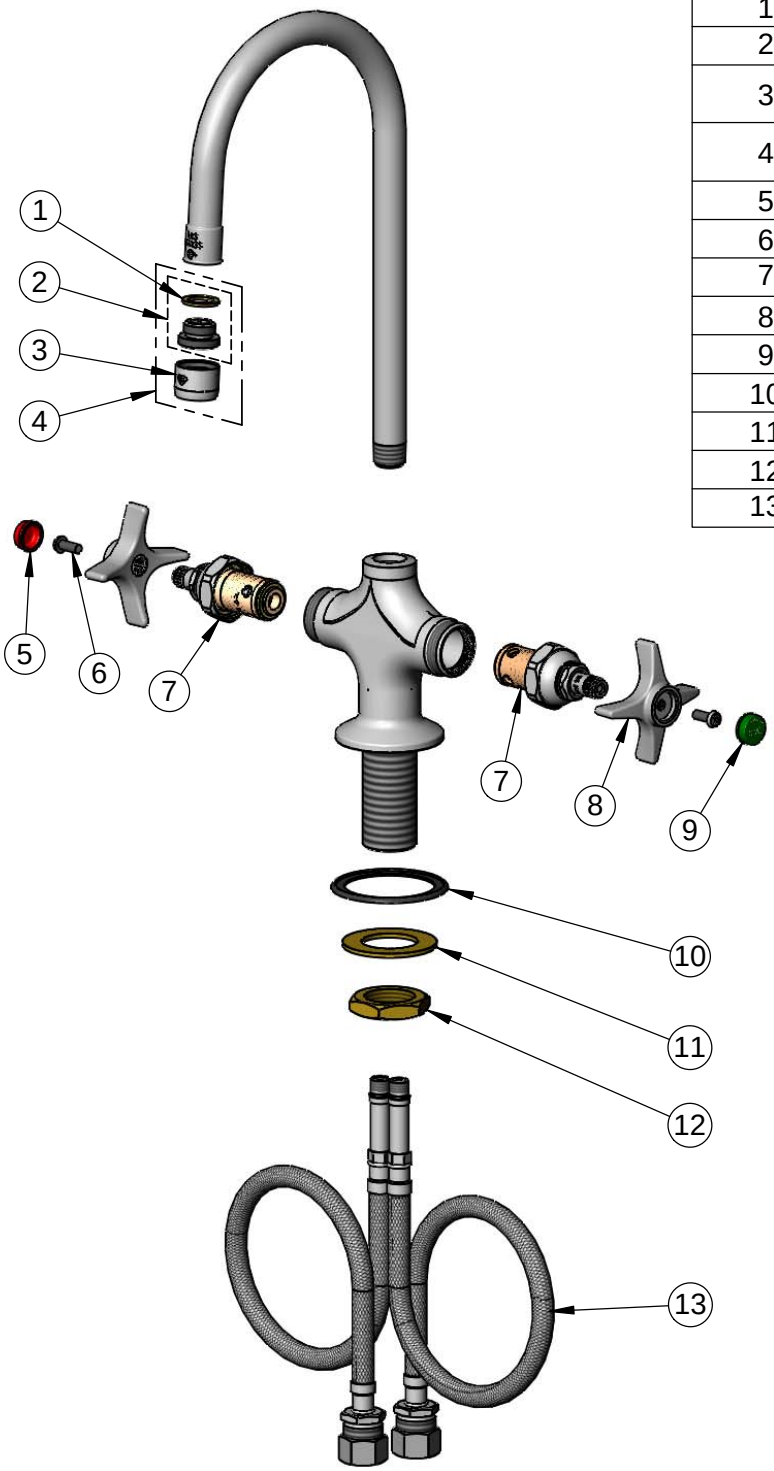

ITEM NO.	SALES NO.	DESCRIPTION
1	001043-45	Washer
2	044A	3/8" to Aerator Adapter
3	B-0199-01	2.2 GPM Aerator, 55/64"-27 UN Female
4	B-0199-02	2.2 GPM Aerator, 3/8" NPSM Male
5	001194-45	Red Index - HW
6	000925-45	Lab Handle Screw
7	005960-40	Eterna Cartridge, RTC
8	000059-40	4-Arm Lab Handle
9	001191-45	Green Index - CW
10	145L	Black Plastic Gasket
11	002290-45	Lock Washer
12	000965-45	Lock Nut
13	012534-45	18" Flexible Supply Hose (2)

Product Specifications:

Single Hole Deck Mount Mixing Faucet w/ Eterna Cartridges, 4-Arm Handles, Rigid Gooseneck, 2.2 GPM Aerator & 18" Flexible Stainless Steel Supply Hoses w/ 1/2" NPSM Male Inlets

Product Compliance:

ASME A112.18.1 / CSA B125.1
NSF 61 - Section 9
NSF 372 (Low Lead Content)
ANSI A117.1 (ADA)

Drawn: JBC	Checked: JRM	Approved: JHB	Date: 02/01/17	Scale: NTS	Sheet: 2 of 2