T&S BRASS AND BRONZE WORKS, INC.

2 Saddleback Cove / P.O. Box 1088
Travelers Rest, SC 29690

Travelers Rest, SC: 800-476-4103 • Simi Valley, CA: 800-423-0150 • Fax: 864-834-3518 • www.tsbrass.com

Model No.

BL-5700-02

Item No.

This Space for Architect/Engineer Approval

Job Name_____Date_____

Model Specified_____ Quantity_____

Customer/Wholesaler_____

Contractor_____

Architect/Engineer_____

ADA Compliant

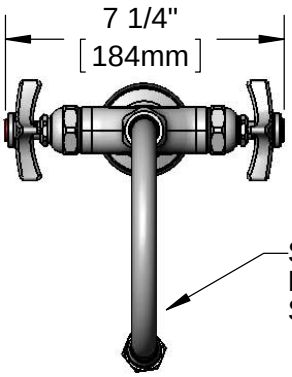

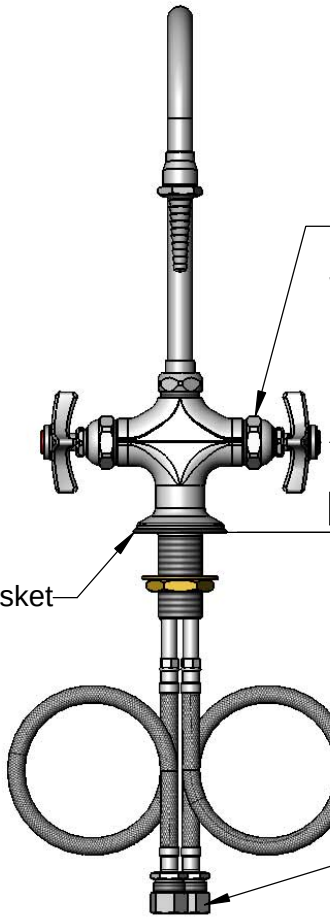

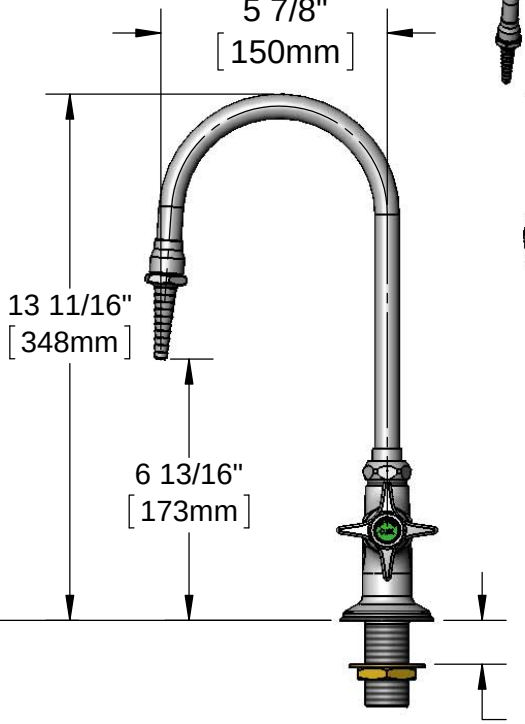

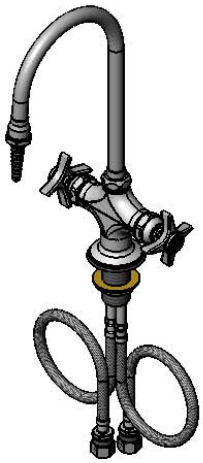

Rough-In Requirement:
Ø 1 1/4" [32mm] Mounting Hole

Product Specifications:

Single Hole Deck Mount Mixing Faucet, Eterna Cartridges, 4-Arm Handles, Swivel Gooseneck w/ Serrated Tip Outlet & 18" Flexible Stainless Steel Supply Hoses w/ 1/2" NPSM Male Inlets

Product Compliance:

ASME A112.18.1 / CSA B125.1
NSF 61 - Section 9
NSF 372 (Low Lead Content)
ANSI A117.1 (ADA)

Drawn: JBC	Checked: JRM	Approved: JHB	Date: 01/26/17	Scale: 1:5	Sheet: 1 of 2

T&S BRASS AND BRONZE WORKS, INC.

2 Saddleback Cove / P.O. Box 1088
Travelers Rest, SC 29690

Travelers Rest, SC: 800-476-4103 • Simi Valley, CA: 800-423-0150 • Fax: 864-834-3518 • www.tsbrass.com

Model No.

BL-5700-02

Item No.

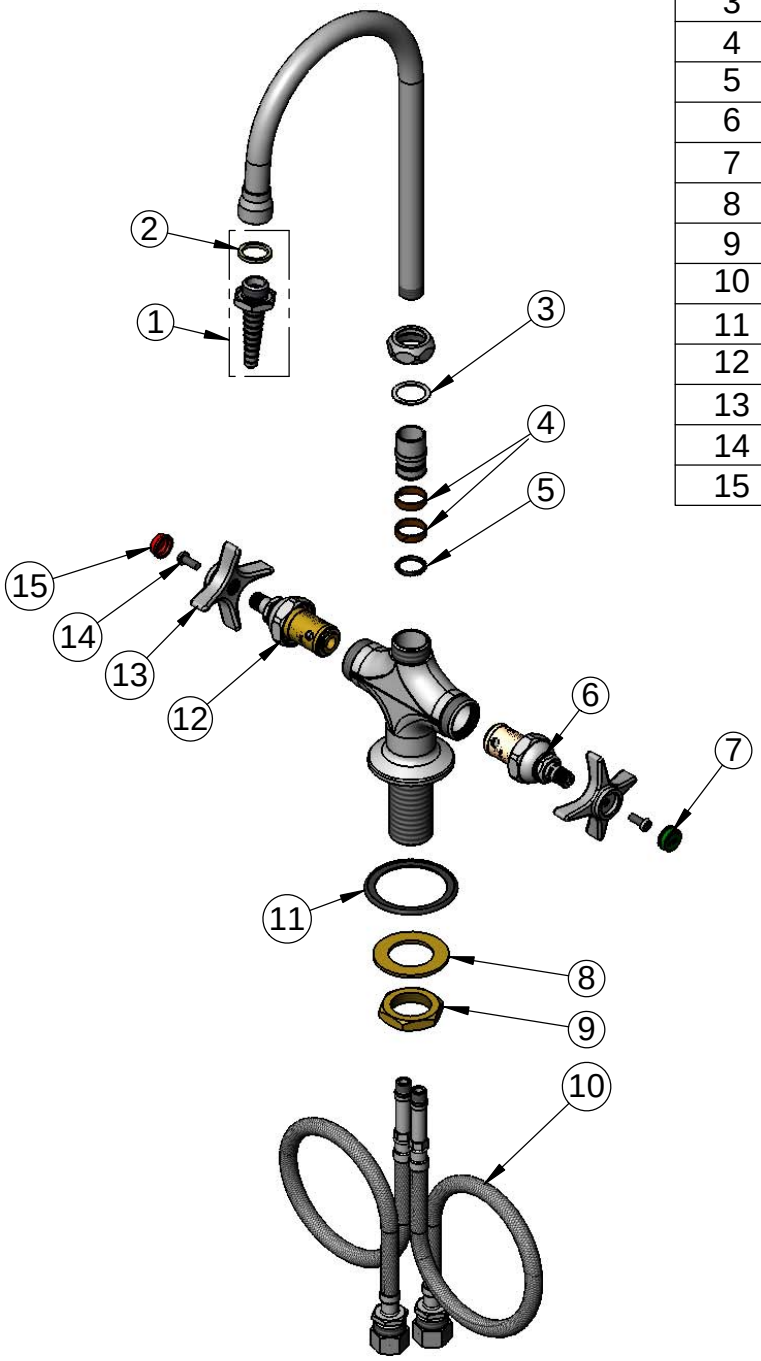

ITEM NO.	SALES NO.	DESCRIPTION
1	B-0198	Serrated Tip w/ Washer
2	001051-45	Washer
3	009538-45	Swivel Washer
4	011429-45	Swivel Sleeves (2)
5	001074-45	O-Ring
6	005959-40	Eterna Cartridge, LTC
7	001191-45	Green Index - CW
8	002290-45	Lock Washer
9	000965-45	Lock Nut
10	012534-45	18" Flexible Supply Hose (2)
11	145L	Black Plastic Base Gasket
12	005960-40	Eterna Cartridge, RTC
13	000059-40	4-Arm Lab Handle
14	000925-45	Lab Handle Screw
15	001194-45	Red Index - HW

Product Specifications:

Single Hole Deck Mount Mixing Faucet, Eterna Cartridges, 4-Arm Handles, Swivel Gooseneck w/ Serrated Tip Outlet & 18" Flexible Stainless Steel Supply Hoses w/ 1/2" NPSM Male Inlets

Product Compliance:

ASME A112.18.1 / CSA B125.1
NSF 61 - Section 9
NSF 372 (Low Lead Content)
ANSI A117.1 (ADA)

Drawn: JBC	Checked: JRM	Approved: JHB	Date: 01/26/17	Scale: NTS	Sheet: 2 of 2