T&S BRASS AND BRONZE WORKS, INC.

2 Saddleback Cove / P.O. Box 1088
Travelers Rest, SC 29690

Travelers Rest, SC: 800-476-4103 • Simi Valley, CA: 800-423-0150 • Fax: 864-834-3518 • www.tsbrass.com

Model No.

B-7222-C08M

Item No.

This Space for Architect/Engineer Approval

Job Name_____Date_____

Model Specified_____ Quantity_____

Customer/Wholesaler_____

Contractor_____

Architect/Engineer_____

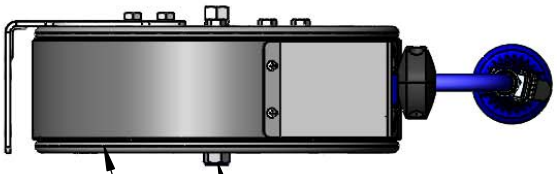

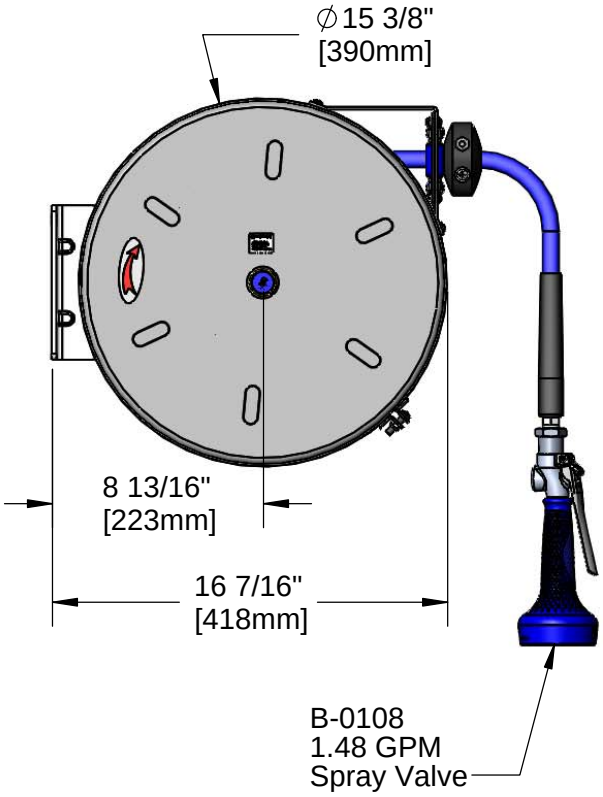

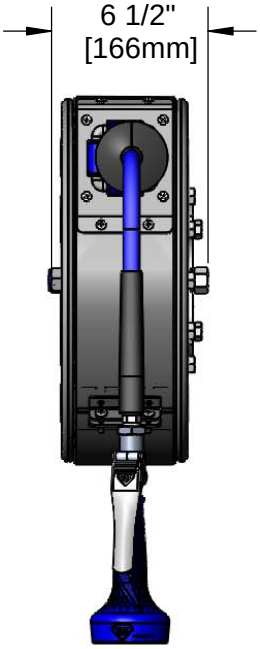

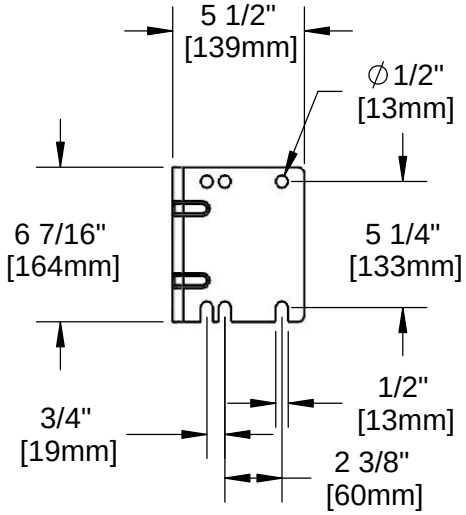

Product Specifications:

3/8" x 30 Ft. Enclosed Coated Reel w/ 1.48 GPM Spray Valve

Product Compliance:

NSF 61 Exempt (Non-Potable)
EPAct 2005 (PRSV)

Drawn: JBC	Checked: JRM	Approved: JHB	Date: 03/11/16	Scale: 1:8	Sheet: 1 of 2

T&S BRASS AND BRONZE WORKS, INC.

2 Saddleback Cove / P.O. Box 1088
Travelers Rest, SC 29690

Travelers Rest, SC: 800-476-4103 • Simi Valley, CA: 800-423-0150 • Fax: 864-834-3518 • www.tsbrass.com

Model No.

B-7222-C08M

Item No.

ITEM NO.	SALES NO.	DESCRIPTION
1	B-0108	1.48 GPM Spray Valve
2	014936-45	Roller Assembly Repair Kit
3	014949-45	Hose Stop Repair Kit
4	014943-45	3/8" x 30' Hose Replacement Kit
5	014932-45	Small Spring Assembly
6	014946-45	3/8" Swivel Repair Kit
7	014948-45	O-Ring Replacement Kit
8	014940-45	Ratchet Repair Kit
9	016154-25	B-0108 3/8" NPT Hose Adapter
10	010476-45	#27 Washer

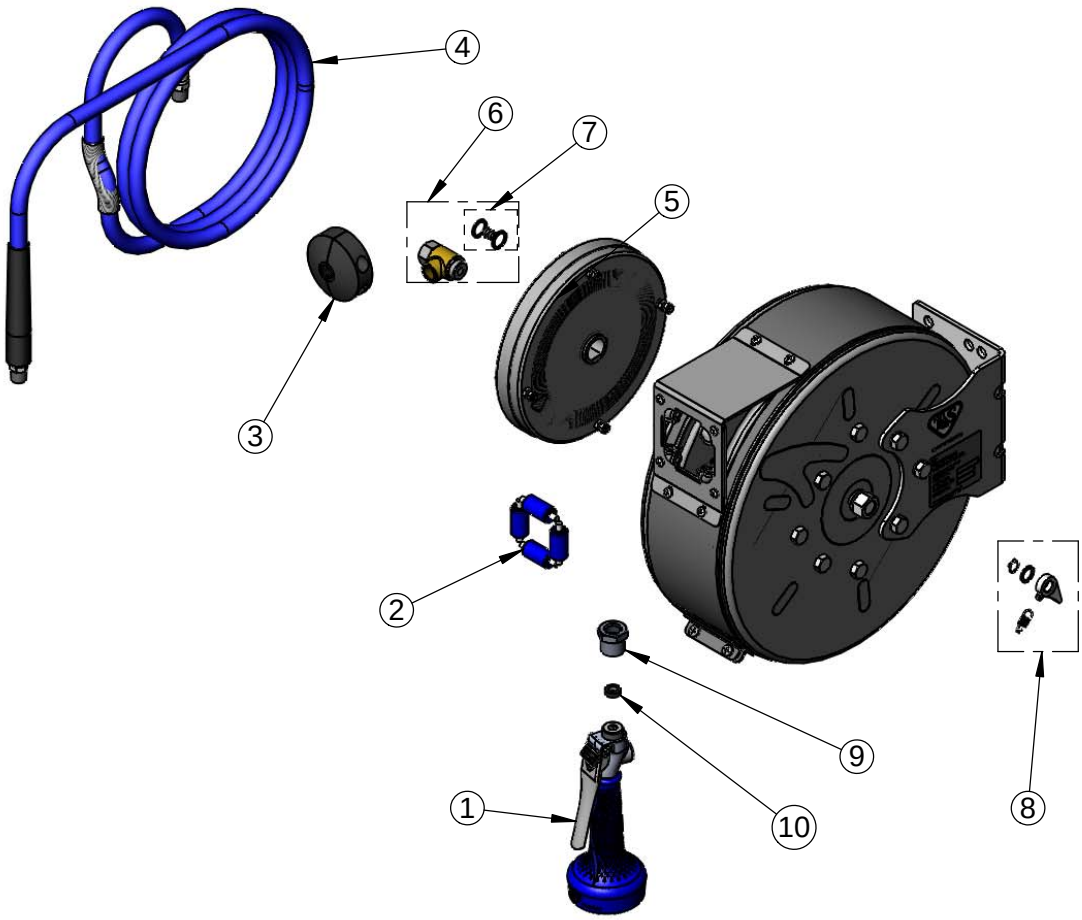

Product Specifications:

3/8" x 30 Ft. Enclosed Coated Reel w/ 1.48 GPM Spray Valve

Product Compliance:

NSF 61 Exempt (Non-Potable)
EPAct 2005 (PRSV)

Drawn: JBC	Checked: JRM	Approved: JHB	Date: 03/11/16	Scale: NTS	Sheet: 2 of 2