T&S BRASS AND BRONZE WORKS, INC.

2 Saddleback Cove / P.O. Box 1088
Travelers Rest, SC 29690

Travelers Rest, SC: 800-476-4103 • Simi Valley, CA: 800-423-0150 • Fax: 864-834-3518 • www.tsbrass.com

Model No.

B-7142-C10

Item No.

This Space for Architect/Engineer Approval

Job Name_____Date_____

Model Specified_____ Quantity_____

Customer/Wholesaler_____

Contractor_____

Architect/Engineer_____

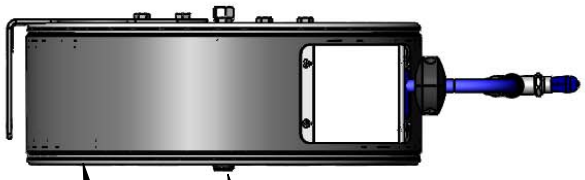

3/8" NPT Female Inlet
(Left Side of Reel)

Enclosed Stainless Steel Hose Reel;
50 Ft. of 3/8" Hose

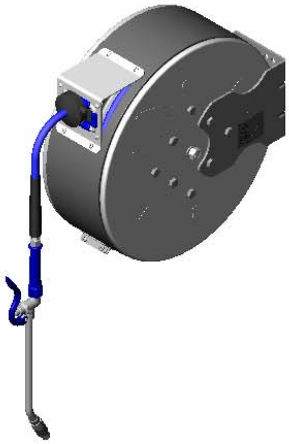

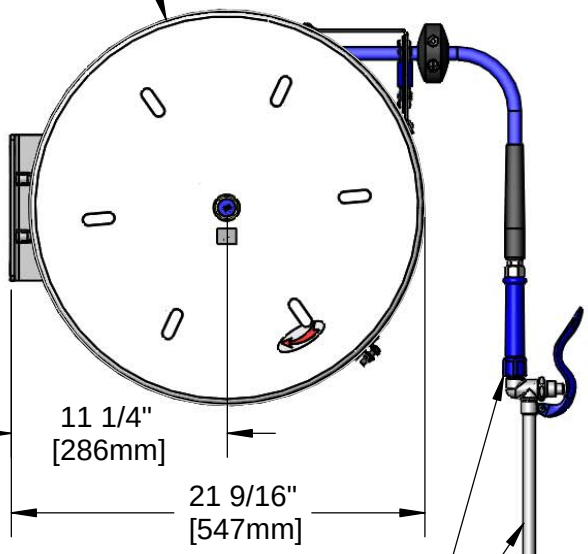

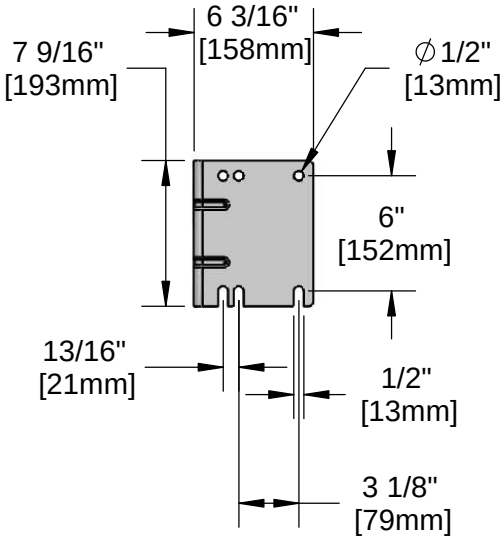

EB-2322
Extended Spray Wand
w/ Blue Spray Valve &
Adjustable Spray Pattern Outlet

Product Specifications:

3/8" x 50 Ft. Enclosed Stainless Steel Reel w/ Extended Spray Wand & Blue Spray Valve

Product Compliance:

NSF 61 Exempt (Non-Potable)
EPAct 2005 Non-Compliant (PRSV)

Drawn: JBC	Checked: JRM	Approved: JHB	Date: 03/11/16	Scale: 1:10	Sheet: 1 of 2

T&S BRASS AND BRONZE WORKS, INC.

2 Saddleback Cove / P.O. Box 1088
Travelers Rest, SC 29690

Travelers Rest, SC: 800-476-4103 • Simi Valley, CA: 800-423-0150 • Fax: 864-834-3518 • www.tsbrass.com

Model No.

B-7142-C10

Item No.

ITEM NO.	SALES NO.	DESCRIPTION
1	EB-2322	Extended Wand Spray Valve
2	014937-45	Roller Assembly Repair Kit
3	014949-45	Hose Stop Repair Kit
4	014942-45	3/8" x 50' Hose Replacement Kit
5	014935-45	Large SS Spring Assembly
6	019561-45	3/8" x 50' Swivel Repair Kit
7	019473-45	3/8" x 50' O-Ring Replacement Kit
8	014940-45	Ratchet Repair Kit

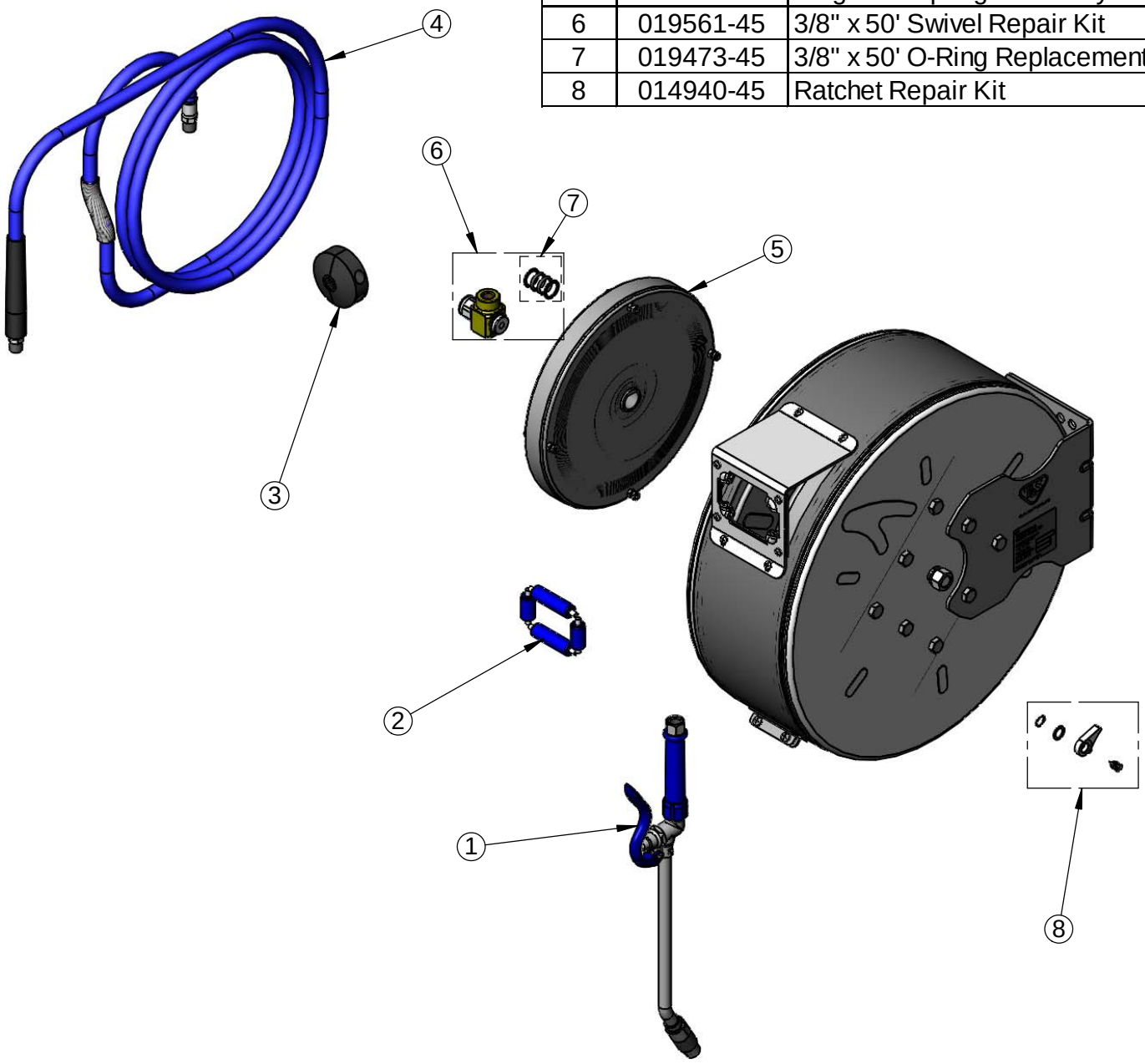

Product Specifications:

3/8" x 50 Ft. Enclosed Stainless Steel Reel w/ Extended Spray Wand & Blue Spray Valve

Product Compliance:

NSF 61 Exempt (Non-Potable)
EPAct 2005 Non-Compliant (PRSV)

Drawn: JBC	Checked: JRM	Approved: JHB	Date: 03/11/16	Scale: NTS	Sheet: 2 of 2