T&S BRASS AND BRONZE WORKS, INC.

2 Saddleback Cove / P.O. Box 1088
Travelers Rest, SC 29690

Travelers Rest, SC: 800-476-4103 • Simi Valley, CA: 800-423-0150 • Fax: 864-834-3518 • www.tsbrass.com

Model No.

B-7142-C08M

Item No.

This Space for Architect/Engineer Approval

Job Name_____Date_____

Model Specified_____ Quantity_____

Customer/Wholesaler_____

Contractor_____

Architect/Engineer_____

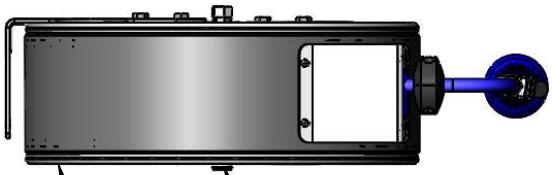

3/8" NPT Female Inlet
(Left Side of Reel)

Enclosed Stainless Steel Hose Reel;
50 Ft. of 3/8" Hose

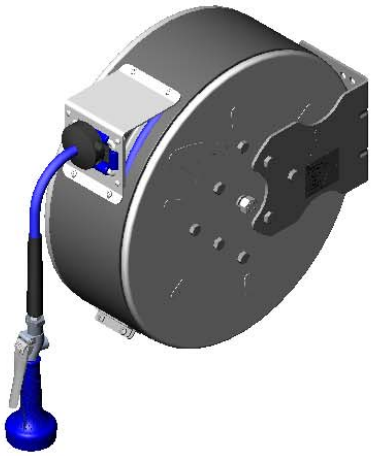

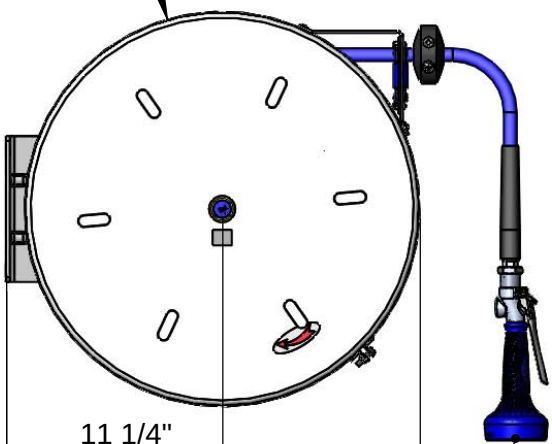

∅20 9/16"
[522mm]

11 1/4"
[286mm]

21 9/16"
[547mm]

B-0108
1.48 GPM
Spray Valve

8 7/16"
[214mm]

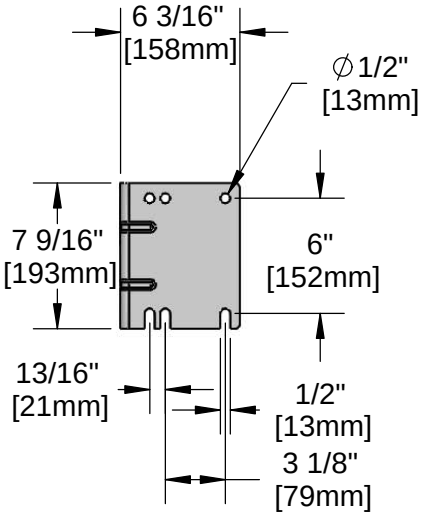

6 3/16"
[158mm]

∅1/2"
[13mm]

7 9/16"
[193mm]

6"
[152mm]

13/16"
[21mm]

1/2"
[13mm]

3 1/8"
[79mm]

Product Specifications:
3/8" x 50 Ft. Enclosed Stainless Steel Reel w/ 1.48 GPM Flow

Product Compliance:

NSF 61 Exempt (Non-Potable)
EPAct 2005 (PRSV)

Drawn: JBC	Checked: JRM	Approved: JHB	Date: 03/11/16	Scale: 1:10	Sheet: 1 of 2

T&S BRASS AND BRONZE WORKS, INC.

2 Saddleback Cove / P.O. Box 1088
Travelers Rest, SC 29690

Travelers Rest, SC: 800-476-4103 • Simi Valley, CA: 800-423-0150 • Fax: 864-834-3518 • www.tsbrass.com

Model No.

B-7142-C08M

Item No.

ITEM NO.	SALES NO.	DESCRIPTION
1	B-0108	1.48 GPM Spray Valve
2	014937-45	Roller Assembly Repair Kit
3	014949-45	Hose Stop Repair Kit
4	014942-45	3/8" x 50' Hose Replacement Kit
5	014935-45	Large SS Spring Assembly
6	019561-45	3/8" x 50' Swivel Repair Kit
7	019473-45	3/8" x 50' O-Ring Replacement Kit
8	014940-45	Ratchet Repair Kit
9	016154-25	B-0108 3/8" NPT Hose Adapter
10	010476-45	#27 Washer

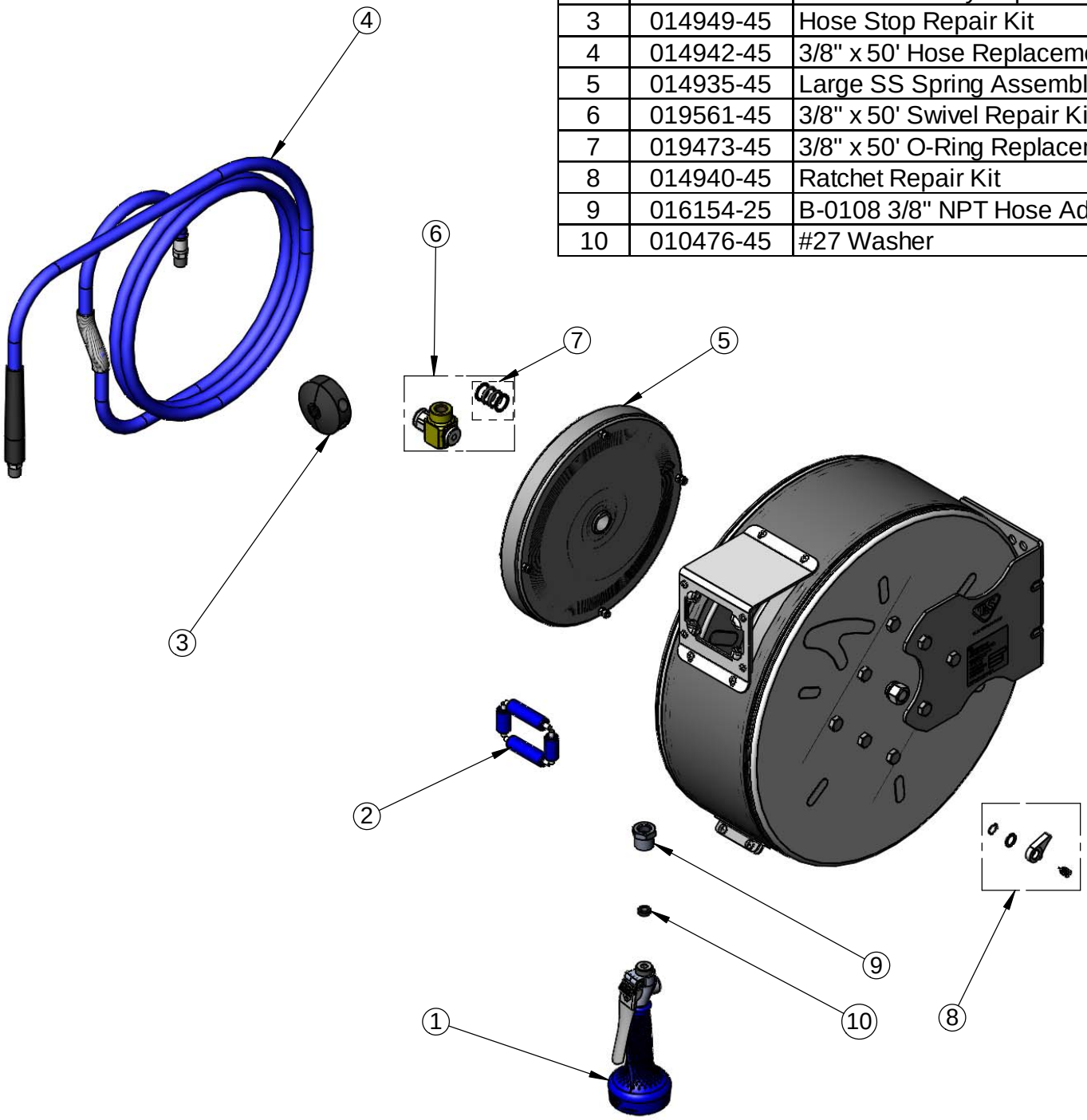

Product Specifications:
3/8" x 50 Ft. Enclosed Stainless Steel Reel w/ 1.48 GPM Flow

Product Compliance:

NSF 61 Exempt (Non-Potable)
EPAct 2005 (PRSV)

Drawn: JBC	Checked: JRM	Approved: JHB	Date: 03/11/16	Scale: NTS	Sheet: 2 of 2