T&S BRASS AND BRONZE WORKS, INC.

2 Saddleback Cove / P.O. Box 1088
Travelers Rest, SC 29690

Travelers Rest, SC: 800-476-4103 • Simi Valley, CA: 800-423-0150 • Fax: 864-834-3518 • www.tsbrass.com

Model No.

B-7122-C08H

Item No.

This Space for Architect/Engineer Approval

Job Name_____Date_____

Model Specified_____ Quantity_____

Customer/Wholesaler_____

Contractor_____

Architect/Engineer_____

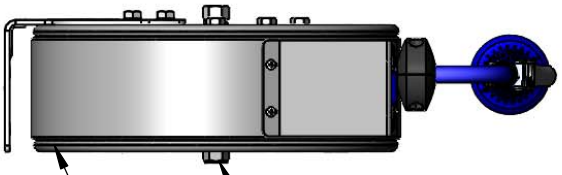

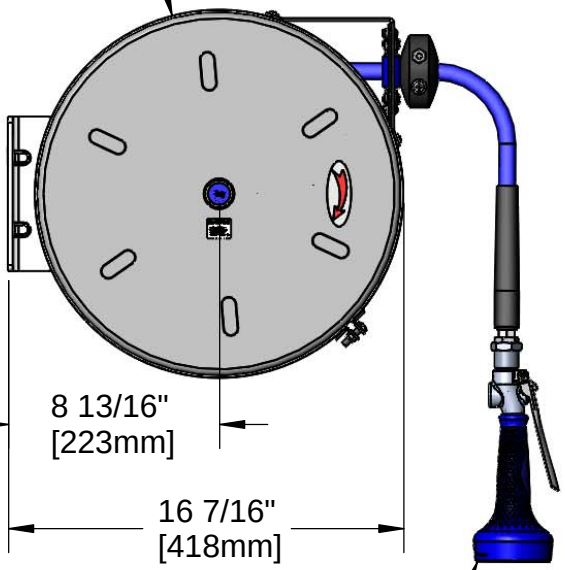

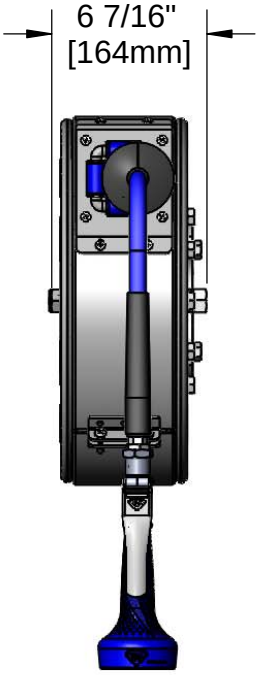

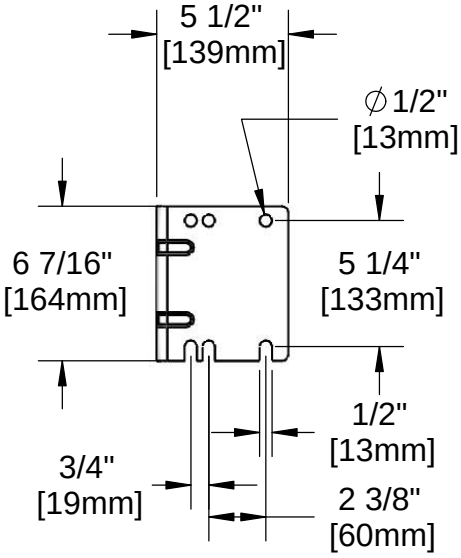

Product Specifications:
3/8" x 30 Ft. Enclosed Stainless Steel Reel with High Flow Spray Valve

Product Compliance:

NSF 61 Exempt (Non-Potable)
EPAct 2005 Non-Compliant (PRSV)

Drawn: JBC	Checked: JRM	Approved: JHB	Date: 03/08/16	Scale: 1:8	Sheet: 1 of 2

T&S BRASS AND BRONZE WORKS, INC.

2 Saddleback Cove / P.O. Box 1088
Travelers Rest, SC 29690

Travelers Rest, SC: 800-476-4103 • Simi Valley, CA: 800-423-0150 • Fax: 864-834-3518 • www.tsbrass.com

Model No.

B-7122-C08H

Item No.

ITEM NO.	SALES NO.	DESCRIPTION
1	B-0108-H	High Flow Spray Valve
2	014936-45	Roller Assembly Repair Kit
3	014949-45	Hose Stop Repair Kit
4	014943-45	3/8" x 30' Hose Replacement Kit
5	014933-45	Small SS Spring Assembly
6	014946-45	3/8" Swivel Repair Kit
7	014948-45	O-Ring Replacement Kit
8	014940-45	Ratchet Repair Kit

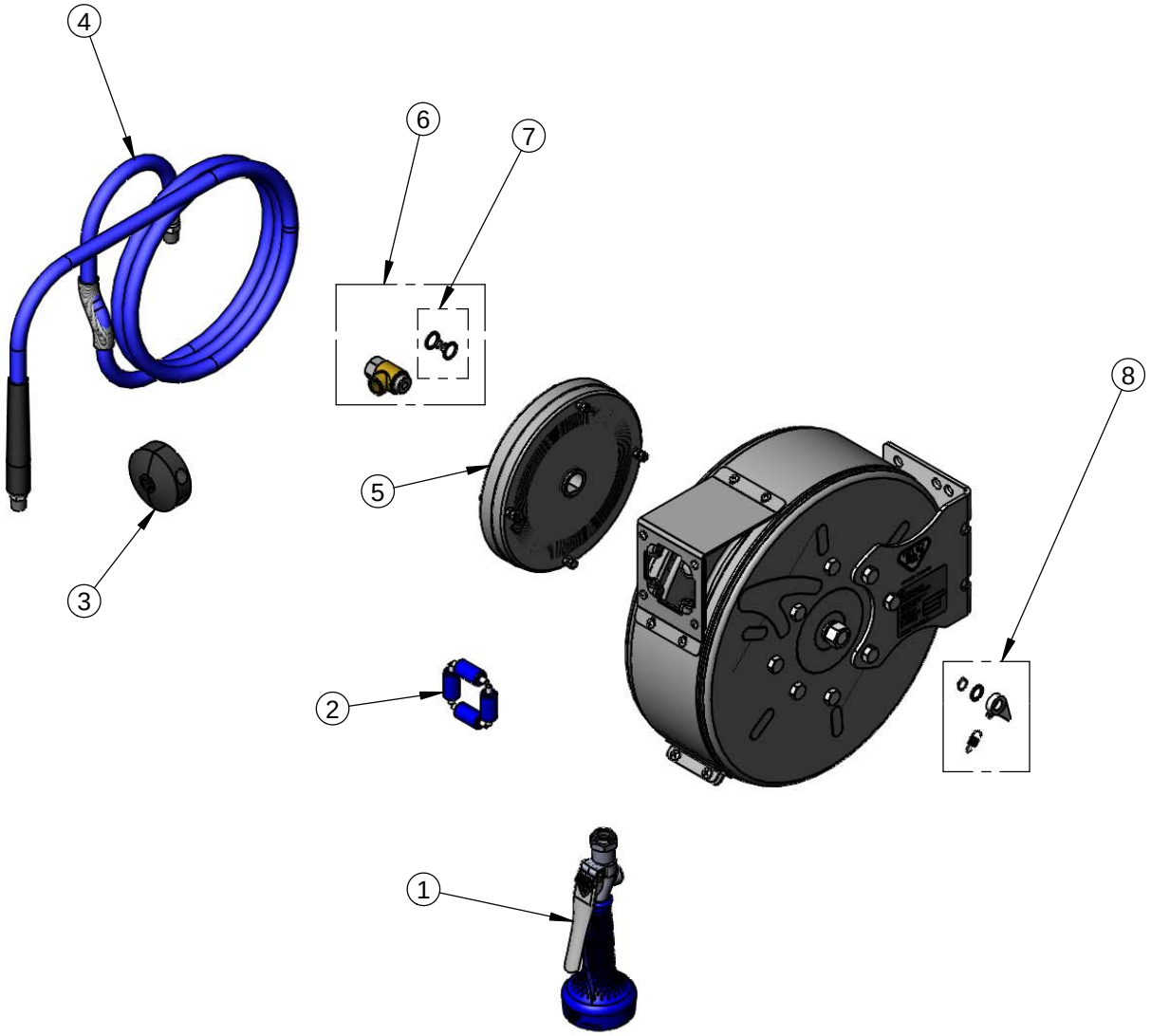

Product Specifications:
3/8" x 30 Ft. Enclosed Stainless Steel Reel with High Flow Spray Valve

Product Compliance:

NSF 61 Exempt (Non-Potable)
EPAct 2005 Non-Compliant (PRSV)

Drawn: JBC	Checked: JRM	Approved: JHB	Date: 03/08/16	Scale: NTS	Sheet: 2 of 2