T&S BRASS AND BRONZE WORKS, INC.

2 Saddleback Cove / P.O. Box 1088
Travelers Rest, SC 29690

Travelers Rest, SC: 800-476-4103 • Simi Valley, CA: 800-423-0150 • Fax: 864-834-3518 • www.tsbrass.com

Model No.

B-2990-F12

Item No.

ADA Compliant

This Space for Architect/Engineer Approval

Job Name_____ Date_____

Model Specified_____ Quantity_____

Customer/Wholesaler_____

Contractor_____

Architect/Engineer_____

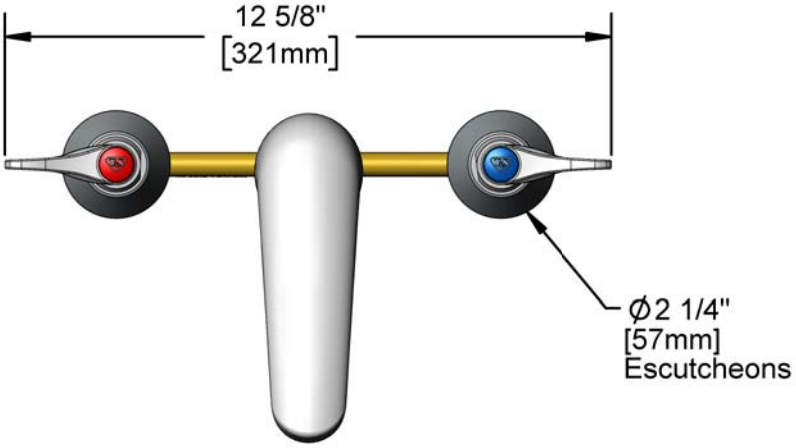

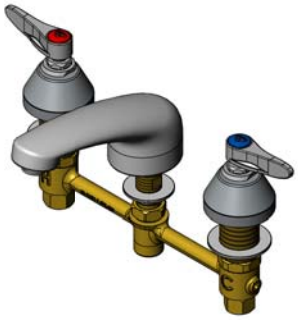

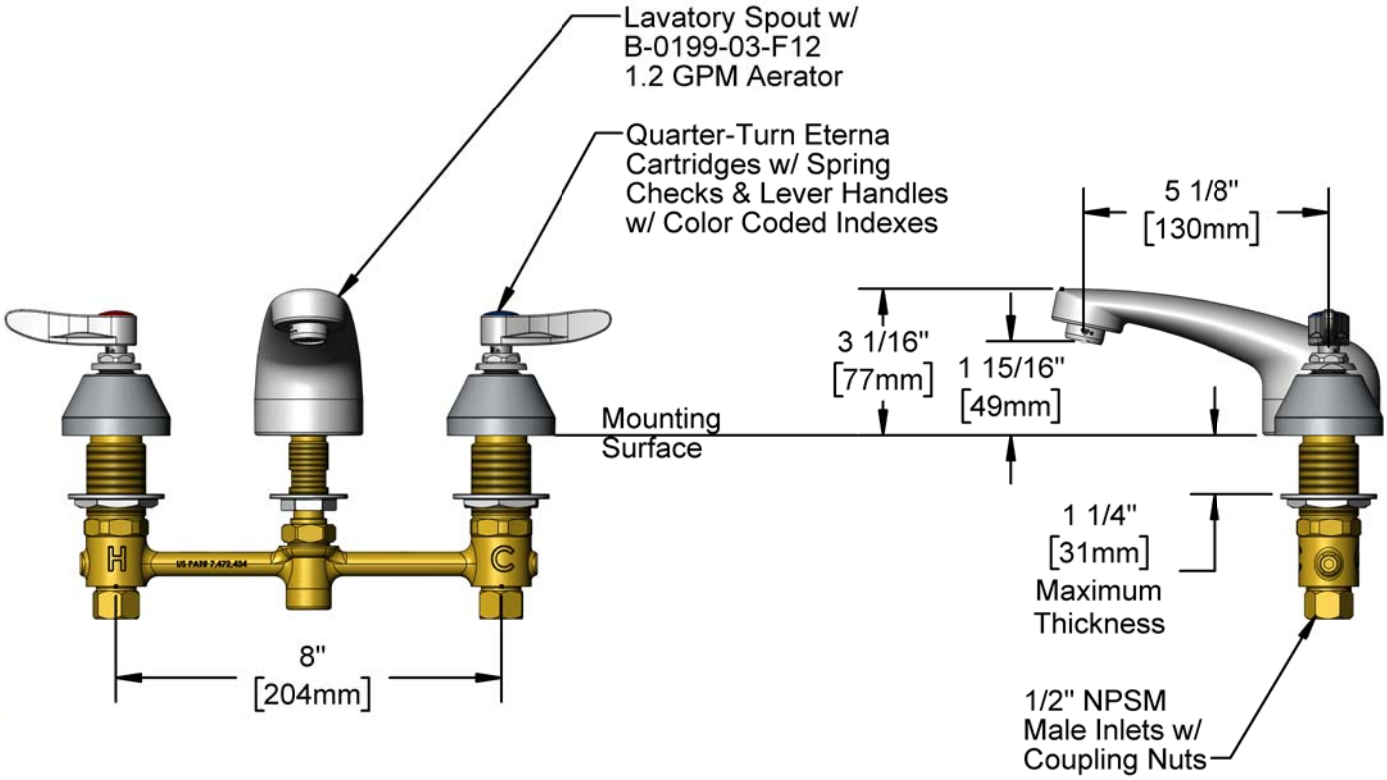

Rough-In Requirement:
Center Shank: Ø1" [25mm] Mounting Hole
Hot/Cold Side: Ø1 1/2" [38mm] Mounting Holes

Product Specifications:

8" Concealed Widespread EasyInstall Mixing Lavatory Faucet, Quarter-Turn Eterna Cartridges w/ Spring Checks, Lever Handles, Lavatory Spout, 1.2 GPM Aerator & 1/2" NPT Male Inlets w/ Coupling Nuts

Product Compliance:

ASME A112.18.1 / CSA B125.1
NSF 61 - Section 9
NSF 372 (Low Lead Content)
ANSI A117.1 (ADA)
EPA WaterSense

Drawn: KJG	Checked: JRM	Approved: JHB	Date: 12/10/19	Scale: 1:4	Sheet: 1 of 2

T&S BRASS AND BRONZE WORKS, INC.

2 Saddleback Cove / P.O. Box 1088
Travelers Rest, SC 29690

Travelers Rest, SC: 800-476-4103 • Simi Valley, CA: 800-423-0150 • Fax: 864-834-3518 • www.tsbrass.com

Model No.
B-2990-F12

Item No.

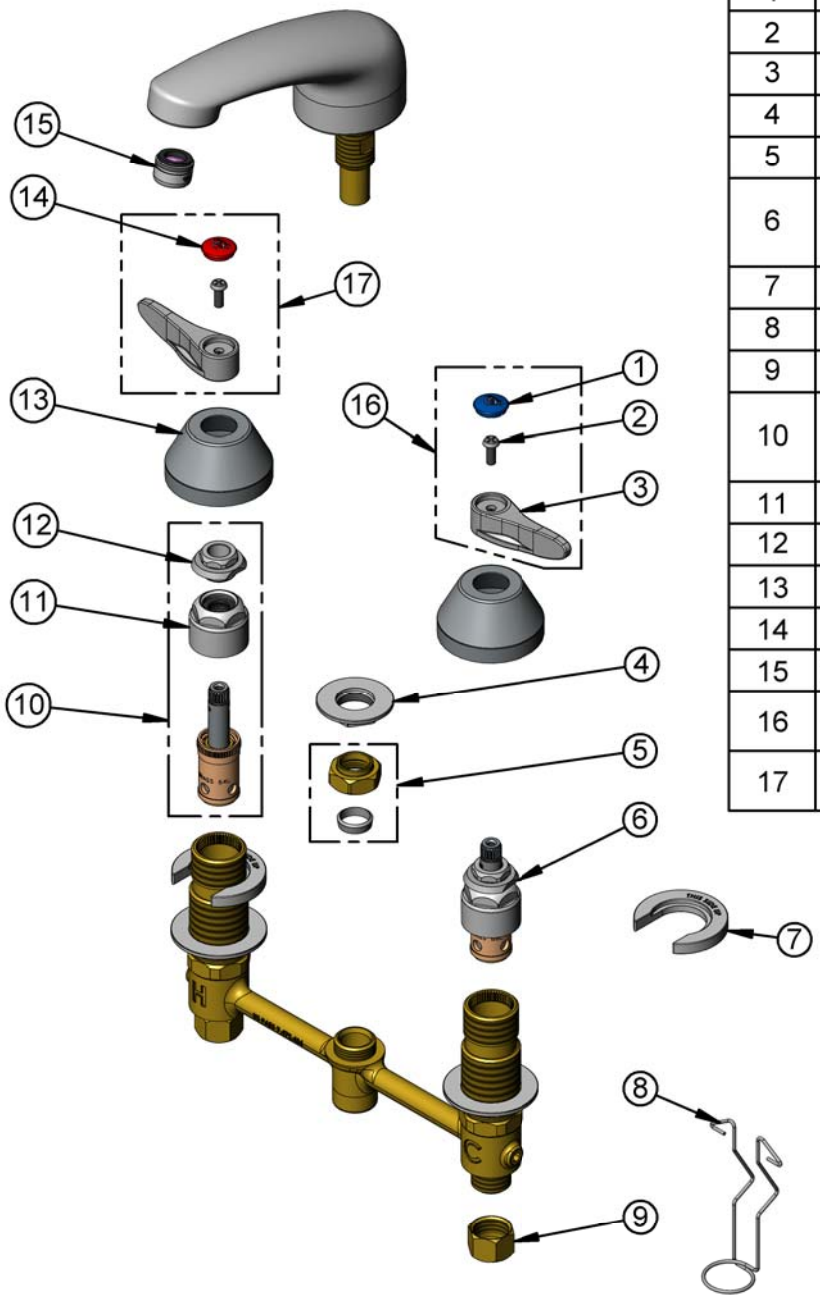

ITEM NO.	SALES NO.	DESCRIPTION
1	018506-19NS	Blue Button Index, Press-in
2	000925-45	Lab Handle Screw
3	001638-45NS	Lever Handle (New Style)
4	016742-45	Center Flange Nut
5	016745-45	Compression Nut & Fitting
6	016752-40NS	EasyInstall CWS LTC Quarter-Turn Eterna Cartridge w/ Spring Check
7	016749-45	Sidebody C-Washer
8	016777-45	CWS Hanger
9	000958-20	Coupling Nut
10	016753-40NS	EasyInstall CWS RTC Quarter-Turn Eterna Cartridge w/ Spring Check
11	016743-25	CWS Eterna Bonnet
12	009002-40NS	Packing Nut (New Style)
13	001257-40NS	Bell Escutcheon
14	001193-19NS	Red Button Index, Press-in
15	B-0199-03-F12	1.2 GPM Aerator
16	001636-45NS	Lever Handle, Blue Index & Screw
17	001637-45NS	Lever Handle, Red Index & Screw

017245-40
Installation Repair Kit
Includes #4, (2)#7, & #8

Product Specifications:

8" Concealed Widespread EasyInstall Mixing Lavatory Faucet, Quarter-Turn Eterna Cartridges w/ Spring Checks, Lever Handles, Lavatory Spout, 1.2 GPM Aerator & 1/2" NPT Male Inlets w/ Coupling Nuts

Product Compliance:

ASME A112.18.1 / CSA B125.1
NSF 61 - Section 9
NSF 372 (Low Lead Content)
ANSI A117.1 (ADA)
EPA WaterSense

Drawn: KJG	Checked: JRM	Approved: JHB	Date: 12/10/19	Scale: NTS	Sheet: 2 of 2