T&S BRASS AND BRONZE WORKS, INC.

2 Saddleback Cove / P.O. Box 1088
Travelers Rest, SC 29690

Travelers Rest, SC: 800-476-4103 • Simi Valley, CA: 800-423-0150 • Fax: 864-834-3518 • www.tsbrass.com

Model No.

B-2866-05FC-QT

Item No.

This Space for Architect/Engineer Approval

Job Name_____Date_____

Model Specified_____ Quantity_____

Customer/Wholesaler_____

Contractor_____

Architect/Engineer_____

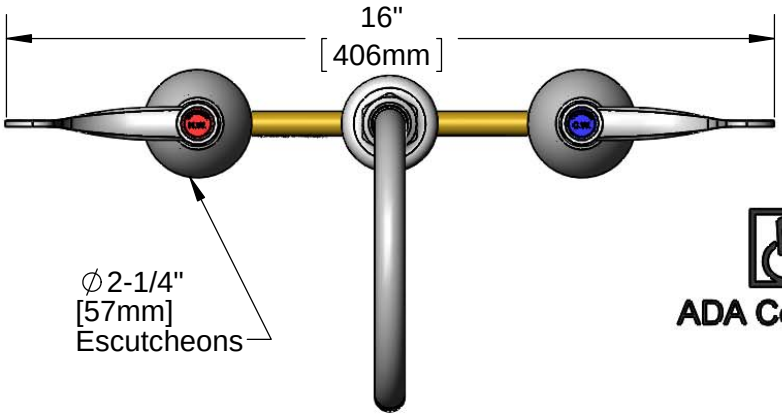

ADA Compliant

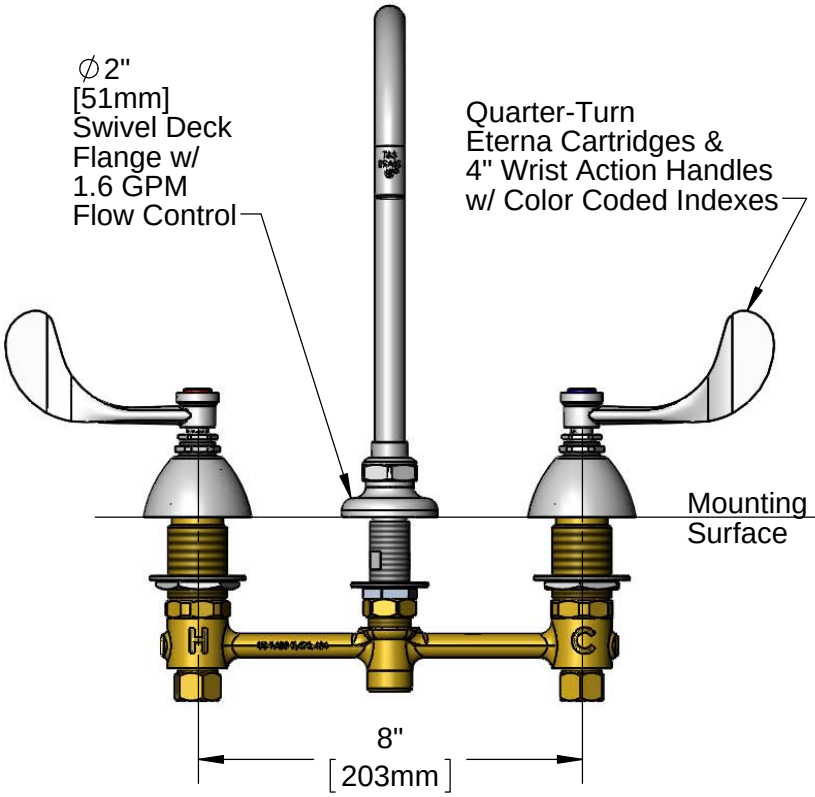

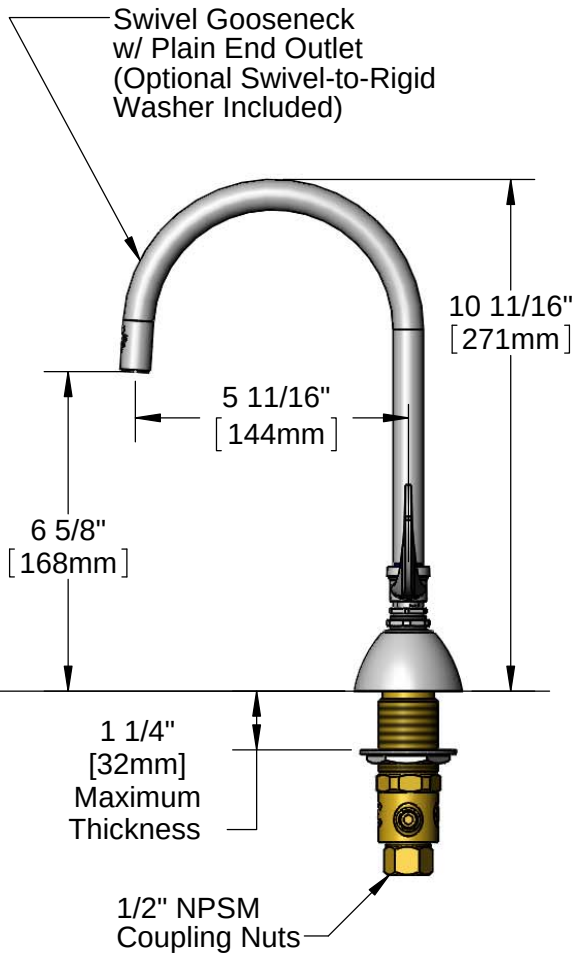

Rough-In Requirement:
∅1" [25mm] for Center Shank
∅1-1/2" [38mm] for Hot/Cold Side

Product Specifications:

EasyInstall Faucet w/ 1.6 GPM Flow Control, 4" Wrist Action Handles, Quarter-Turn Eterna Cartridges, 8" Inlet Centers & Swivel Gooseneck w/ Plain End Outlet

Product Compliance:

ASME A112.18.1 / CSA B125.1
NSF 61 - Section 9
NSF 372 (Low Lead Content)
ANSI A117.1 (ADA)

Drawn: JBC	Checked: JRM	Approved: JHB	Date: 02/04/16	Scale: 1:4	Sheet: 1 of 2

T&S BRASS AND BRONZE WORKS, INC.

2 Saddleback Cove / P.O. Box 1088
Travelers Rest, SC 29690

Travelers Rest, SC: 800-476-4103 • Simi Valley, CA: 800-423-0150 • Fax: 864-834-3518 • www.tsbrass.com

Model No.

B-2866-05FC-QT

Item No.

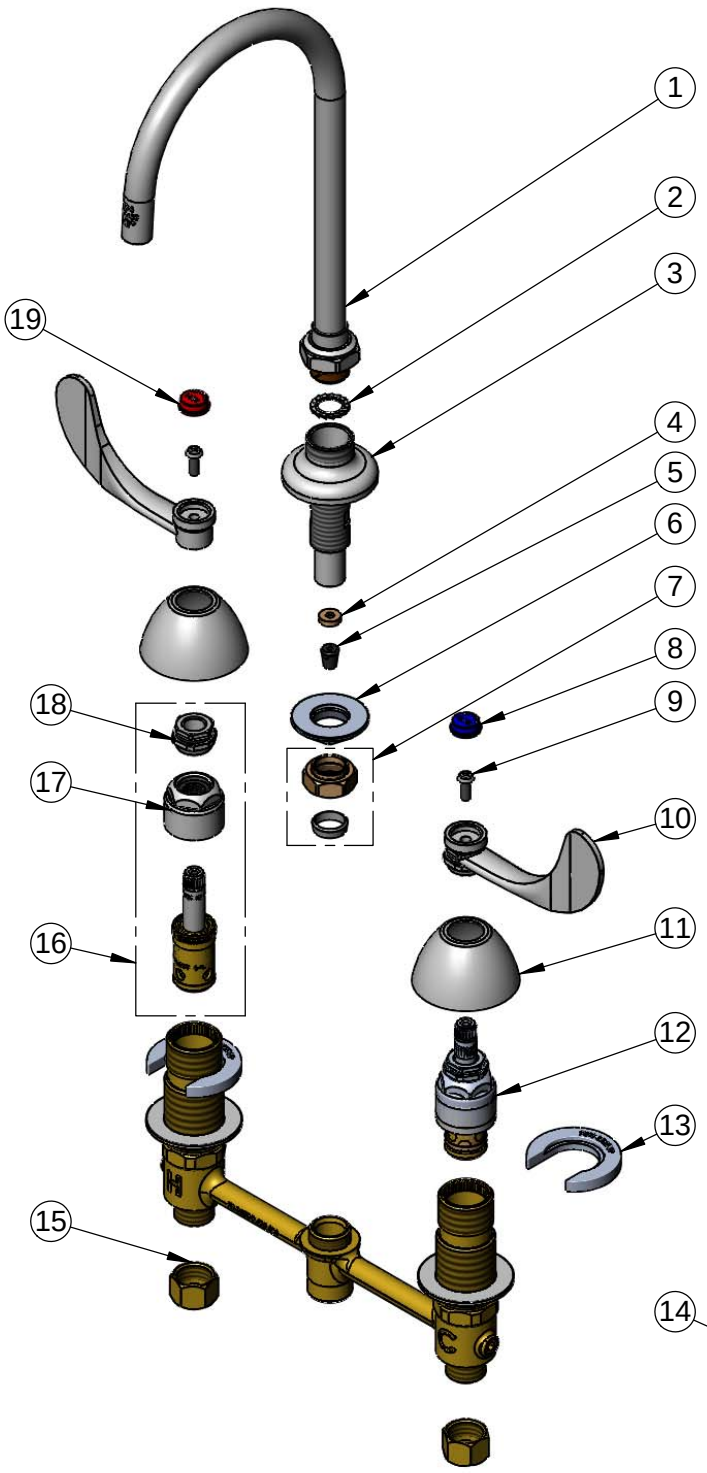

ITEM NO.	SALES NO.	DESCRIPTION
1	133XP	Plain End Swivel Gooseneck
2	014200-45	Star Washer, Anti-Rotation
3	016754-40	EasyInstall CWS Swivel Center Shank
4	009069-45	Flow Control Holder
5	016232-45	Flow Tower, 1.6 GPM
6	016742-45	Center Flange Nut
7	016745-45	Compression Nut & Fitting
8	001686-45	Blue Index - CW
9	000925-45	Lab Handle Screw
10	B-WH4	4" Wrist Action Handle
11	001257-40	Bell Escutcheon
12	016925-40	EasyInstall CWS LTC Eterna (Teflon)
13	016749-45	Sidebody C-Washer
14	016777-45	CWS Hanger
15	000958-20	Coupling Nut
16	016926-40	B-1100 Seat Washer Screw
17	016743-25	CWS Bonnet Assembly
18	009002-25	Packing Nut Assembly
19	001194-45	Red Index - HW

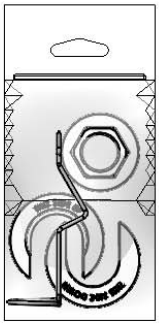

017245-40
Installation Repair Kit
Includes #6, (2)#13, & #14

Product Specifications:

EasyInstall Faucet w/ 1.6 GPM Flow Control, 4" Wrist Action Handles, Quarter-Turn Eterna Cartridges, 8" Inlet Centers & Swivel Gooseneck w/ Plain End Outlet

Product Compliance:

ASME A112.18.1 / CSA B125.1
NSF 61 - Section 9
NSF 372 (Low Lead Content)
ANSI A117.1 (ADA)

Drawn: JBC	Checked: JRM	Approved: JHB	Date: 02/04/16	Scale: NTS	Sheet: 2 of 2