T&S BRASS AND BRONZE WORKS, INC.

2 Saddleback Cove / P.O. Box 1088
Travelers Rest, SC 29690

Travelers Rest, SC: 800-476-4103 • Simi Valley, CA: 800-423-0150 • Fax: 864-834-3518 • www.tsbrass.com

Model No.
B-2865-LF05

Item No.

ADA Compliant

This Space for Architect/Engineer Approval

Job Name_____Date_____

Model Specified_____ Quantity_____

Customer/Wholesaler_____

Contractor_____

Architect/Engineer_____

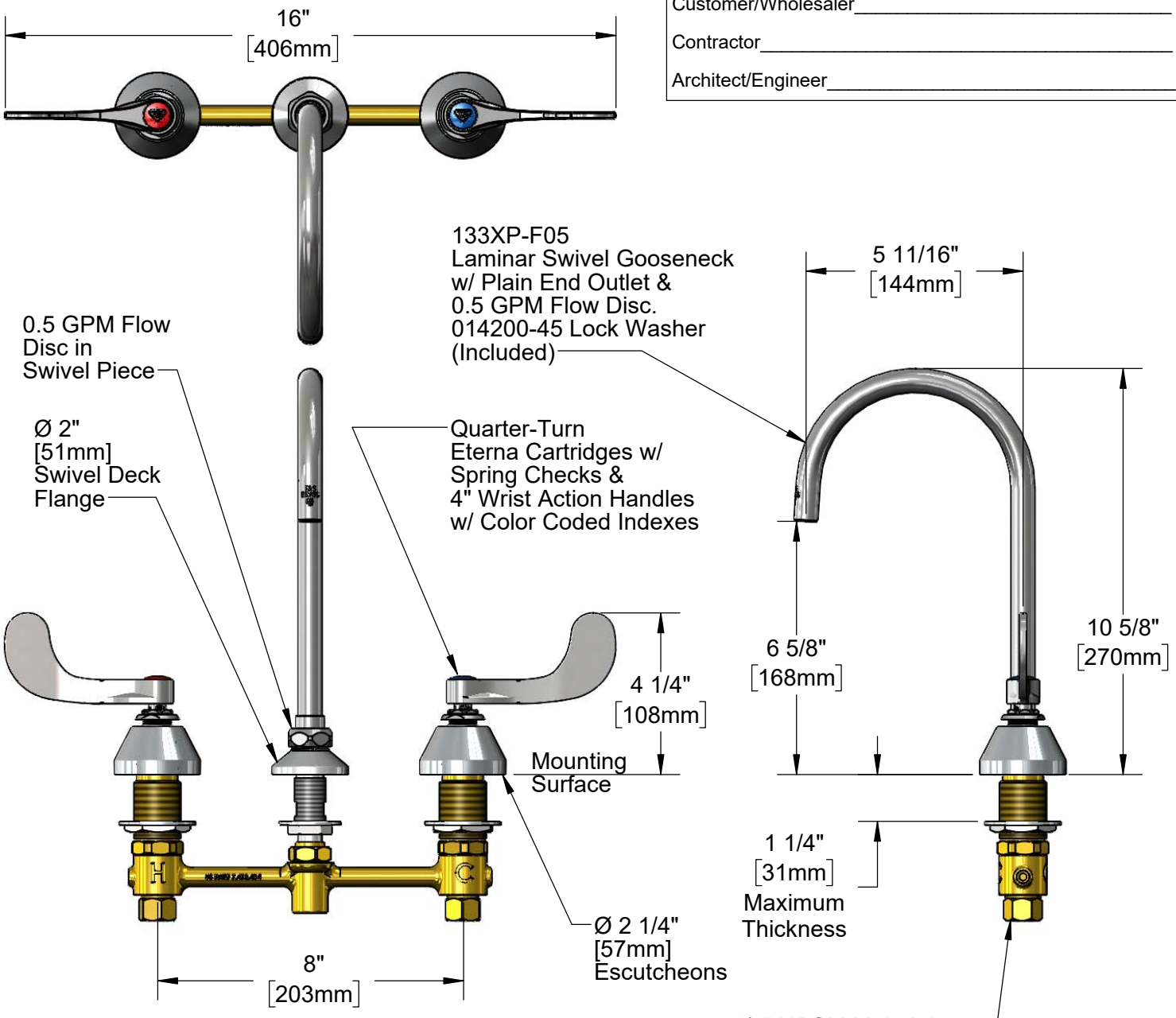

Rough-In Requirement:
Center Shank: ∅1" [25mm] Mounting Hole
Hot/Cold Bodies: ∅1 1/2" [38mm] Mounting Holes

Product Specifications:

8" Concealed Widespread EasyInstall Mixing Faucet, Quarter-Turn Eterna Cartridges w/ Spring Checks, 4" Wrist Action Handles, 5 11/16" Laminar Rigid/Swivel Gooseneck, Plain End Outlet, 0.5 GPM Flow Disc & 1/2" NPT Male Inlets

Product Compliance:

ASME A112.18.1 / CSA B125.1
NSF 61 - Section 9
NSF 372 (Low Lead Content)
ANSI A117.1 (ADA)

Drawn:	MRC	Checked:	KJG	Approved:	JHB	Date:	10/13/20	Scale:	1:4	Sheet:	1 of 2

T&S BRASS AND BRONZE WORKS, INC.

2 Saddleback Cove / P.O. Box 1088
Travelers Rest, SC 29690

Travelers Rest, SC: 800-476-4103 • Simi Valley, CA: 800-423-0150 • Fax: 864-834-3518 • www.tsbrass.com

Model No.
B-2865-LF05

Item No.

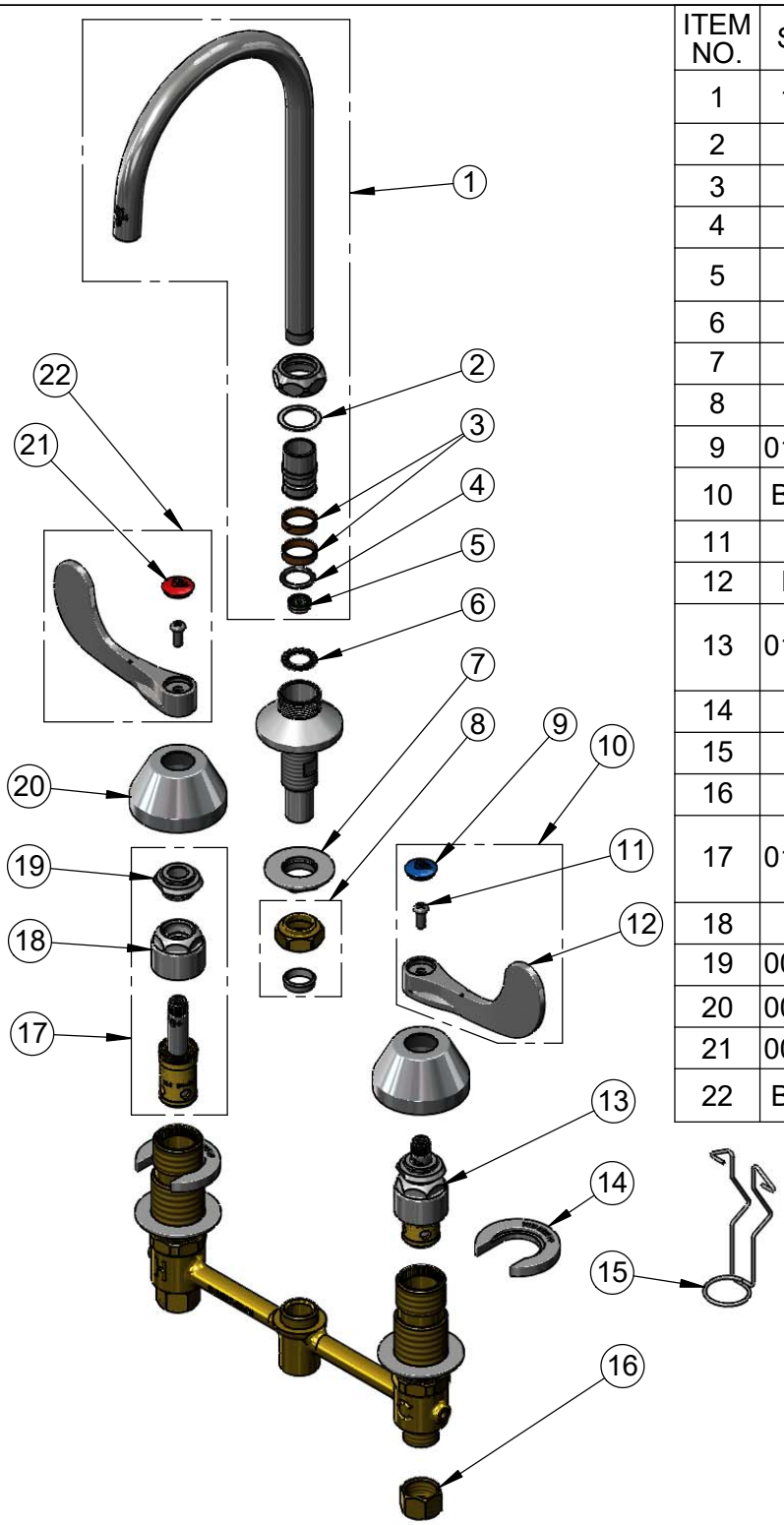

ITEM NO.	SALES NO.	DESCRIPTION
1	133XP-F05	5 11/16" Plain End Laminar Swivel Gooseneck w/ 0.5 GPM Flow Disc
2	009538-45	Swivel Washer
3	011429-45	Swivel Sleeves (2)
4	001074-45	O-Ring
5	FD15	Flow Disc, 0.5 GPM [1.9 L/min.] (Lime)
6	014200-45	Star Washer, Anti-Rotation
7	016742-45	Center Flange Nut
8	016745-45	Compression Nut & Fitting
9	018506-19NS	Blue Button Index, Press-in
10	B-WH4C-NS	Wrist Action Handle, Blue Index & Screw
11	000925-45	Lab Handle Screw
12	B-WH4-NS	Wrist Action Handle - New Style
13	016752-40NS	EasyInstall, CWS Quarter-Turn Eterna Cartridge w/ Spring Check, LTC
14	016749-45	Sidebody C-Washer
15	016777-45	CWS Hanger
16	000958-20	Coupling Nut
17	016753-40NS	EasyInstall, CWS Quarter-Turn Eterna Cartridge w/ Spring Check, RTC
18	016743-25	CWS Eterna Bonnet
19	009002-40NS	Packing Nut (New Style)
20	001257-40NS	Bell Escutcheon
21	001193-19NS	Red Button Index, Press-in
22	B-WH4H-NS	Wrist Action Handle, Red Index & Screw

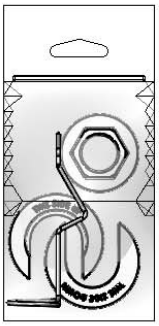

017245-40
Installation Repair Kit
Includes #7, (2)#14 & #15

Product Specifications:

8" Concealed Widespread EasyInstall Mixing Faucet, Quarter-Turn Eterna Cartridges w/ Spring Checks, 4" Wrist Action Handles, 5 11/16" Laminar Rigid/Swivel Gooseneck, Plain End Outlet, 0.5 GPM Flow Disc & 1/2" NPT Male Inlets

Product Compliance:

ASME A112.18.1 / CSA B125.1
NSF 61 - Section 9
NSF 372 (Low Lead Content)
ANSI A117.1 (ADA)

Drawn:	Checked:	Approved:	Date:	Scale:	Sheet:
MRC	KJG	JHB	10/13/20	NTS	2 of 2