T&S BRASS AND BRONZE WORKS, INC.

2 Saddleback Cove / P.O. Box 1088
Travelers Rest, SC 29690

Travelers Rest, SC: 800-476-4103 • Simi Valley, CA: 800-423-0150 • Fax: 864-834-3518 • www.tsbrass.com

Model No.

B-2347-09-WH4

Item No.

This Space for Architect/Engineer Approval

Job Name_____Date_____

Model Specified_____ Quantity_____

Customer/Wholesaler_____

Contractor_____

Architect/Engineer_____

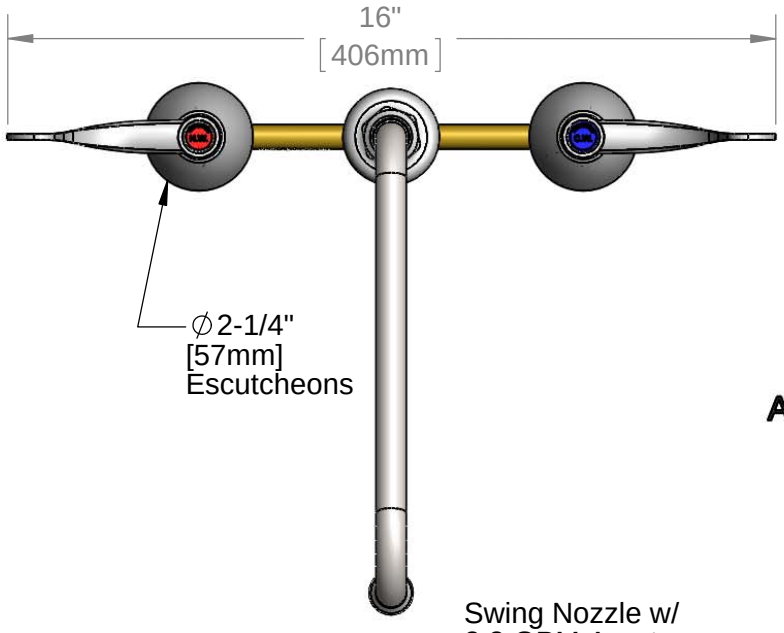

ADA Compliant

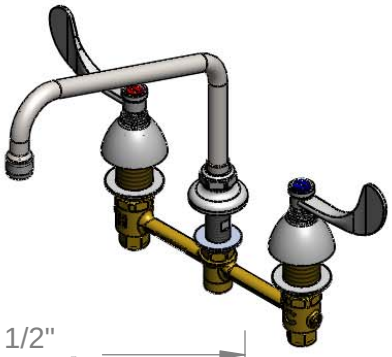

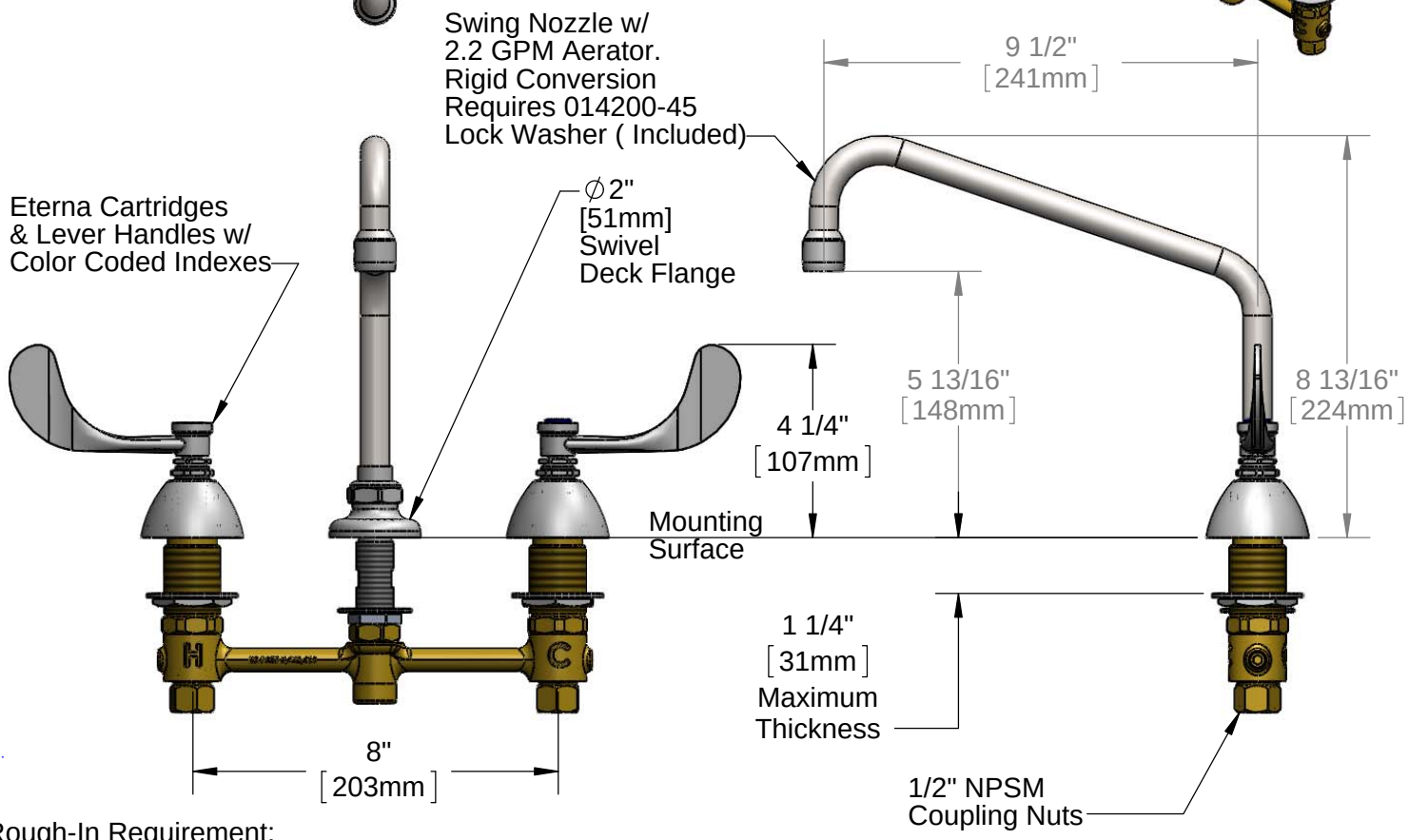

Rough-In Requirement:
∅1" [25mm] for Center Shank
∅1 1/2" [38mm] for Hot/Cold Side

Product Specifications:

8" Deck Mount EasyInstall Mixing Faucet, Eterna Cartridges, 4" Wrist Action Handles & Swing Nozzle w/ 2.2 GPM Aerator

Product Compliance:

ASME A112.18.1 / CSA B125.1
NSF 61 - Section 9
NSF 372 (Low Lead Content)
ANSI A117.1 (ADA)

Drawn: DHL	Checked: KJG	Approved: JHB	Date: 05/14/15	Scale: 1:4	Sheet: 1 of 2

T&S BRASS AND BRONZE WORKS, INC.

2 Saddleback Cove / P.O. Box 1088
Travelers Rest, SC 29690

Travelers Rest, SC: 800-476-4103 • Simi Valley, CA: 800-423-0150 • Fax: 864-834-3518 • www.tsbrass.com

Model No.

B-2347-09-WH4

Item No.

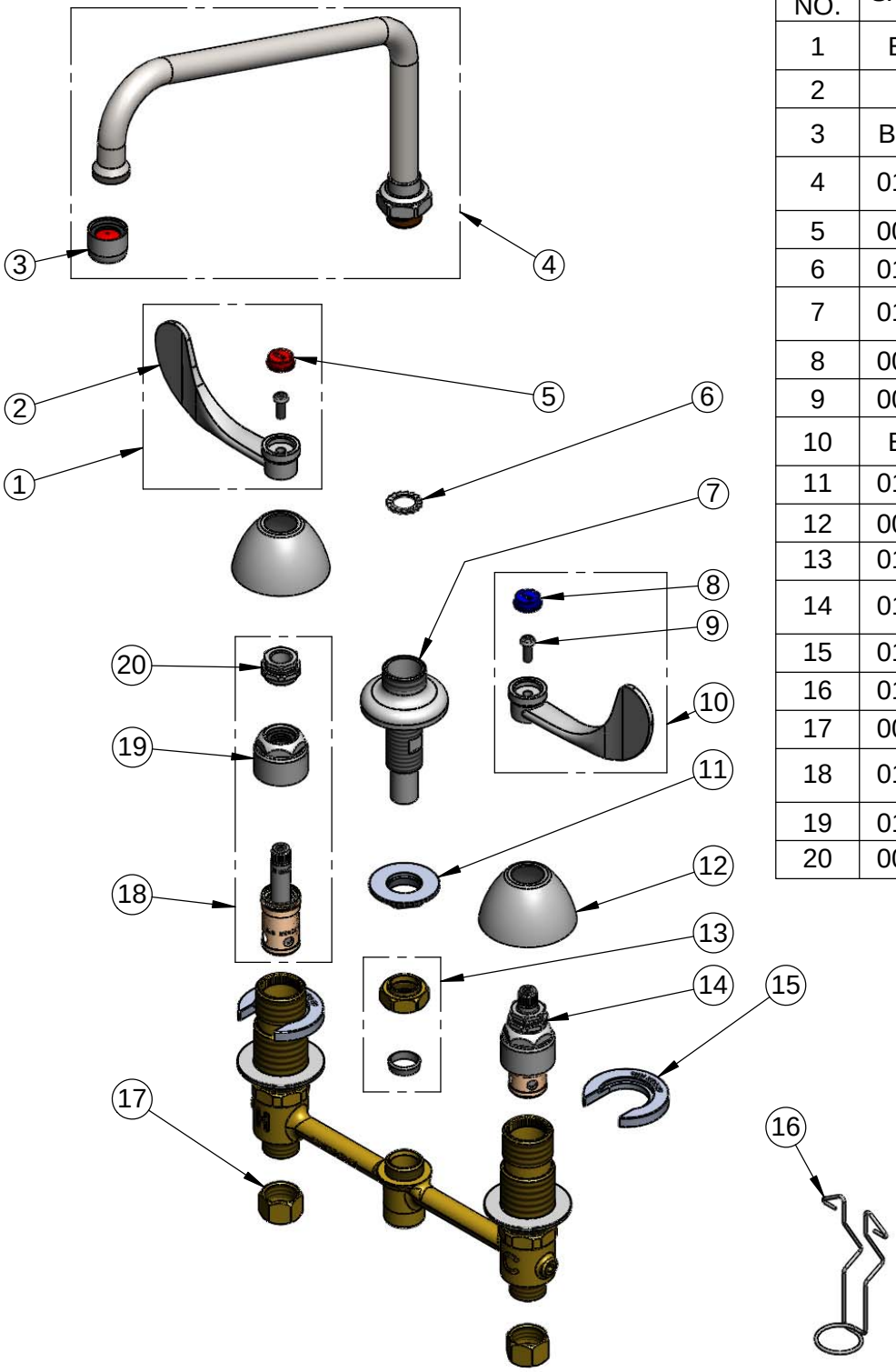

ITEM NO.	SALES NO.	DESCRIPTION
1	B-WH4H	4" Wrist Action Handle, Screw & Hot Index
2	B-WH4	4" Wrist Action Handle
3	B-0199-01	2.2 GPM Aerator, 55/64"-27 UN Female
4	015499-40	B-2347-09 Swing Nozzle w/ B-0199-01 Aerator
5	001194-45	Red Index - HW
6	014200-45	Star Washer, Anti-Rotation
7	016754-40	EasyInstall CWS Swivel Center Shank
8	001686-45	Blue Index - CW
9	000925-45	Lab Handle Screw
10	B-WH4C	4" Wrist Action Handle, Screw & Cold Index
11	016742-45	Center Flange Nut
12	001257-40	Bell Escutcheon
13	016745-45	Compression Nut & Fitting
14	016752-40	EasyInstall CWS LTC Eterna (Teflon)
15	016749-45	Sidebody C-Washer
16	016777-45	CWS Hanger
17	000958-20	Coupling Nut
18	016753-40	EasyInstall CWS RTC Eterna (Teflon)
19	016743-25	CWS Eterna Bonnet
20	009002-25	Packing Nut

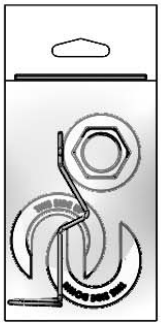

017245-40
Installation Repair Kit
Includes #11, (2)#15, & #16

Product Specifications:

8" Deck Mount EasyInstall Mixing Faucet, Eterna Cartridges, 4" Wrist Action Handles & Swing Nozzle w/ 2.2 GPM Aerator

Product Compliance:

ASME A112.18.1 / CSA B125.1
NSF 61 - Section 9
NSF 372 (Low Lead Content)
ANSI A117.1 (ADA)

Drawn: DHL	Checked: KJG	Approved: JHB	Date: 05/14/15	Scale: NTS	Sheet: 2 of 2