T&S BRASS AND BRONZE WORKS, INC.

2 Saddleback Cove / P.O. Box 1088
Travelers Rest, SC 29690

Travelers Rest, SC: 800-476-4103 • Simi Valley, CA: 800-423-0150 • Fax: 864-834-3518 • www.tsbrass.com

Model No.

B-2278-CR-C-EL

Item No.

This Space for Architect/Engineer Approval

Job Name_____Date_____

Model Specified_____ Quantity_____

Customer/Wholesaler_____

Contractor_____

Architect/Engineer_____

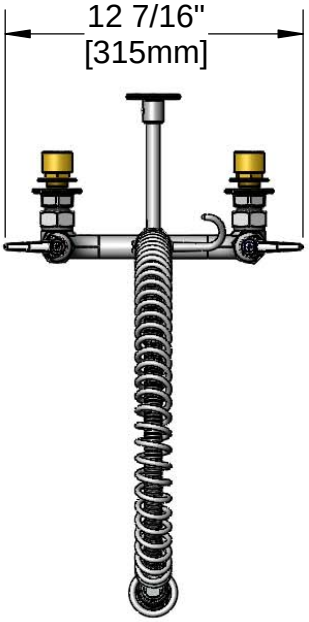

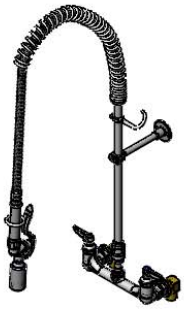

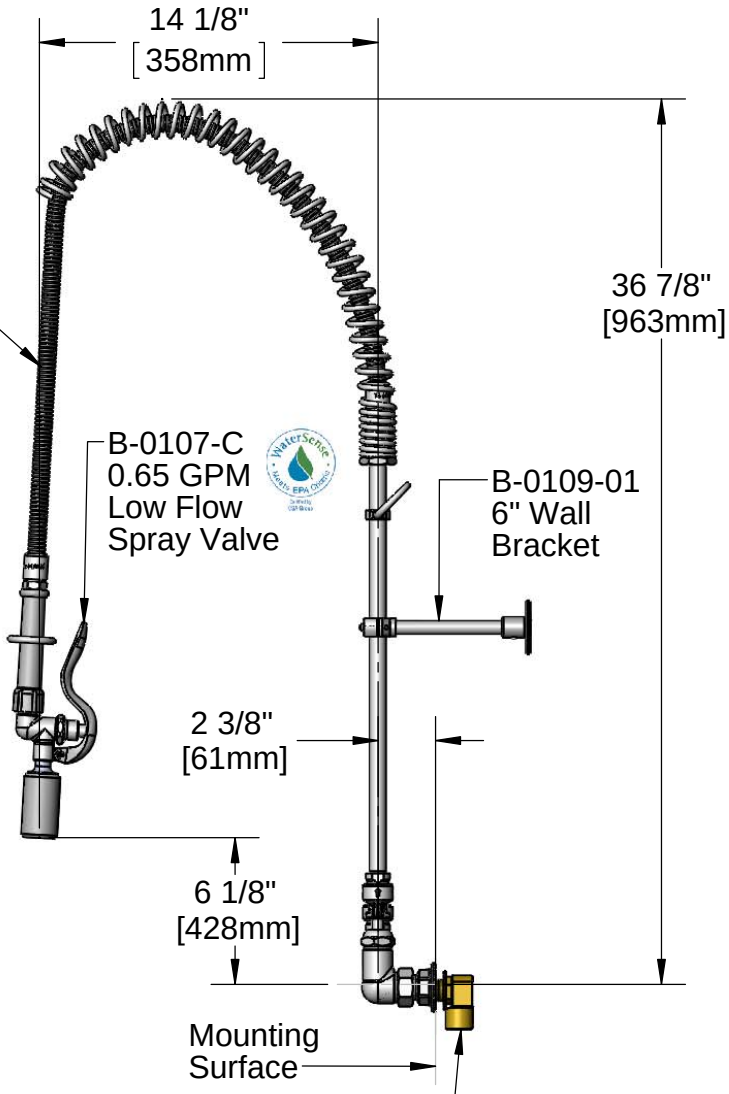

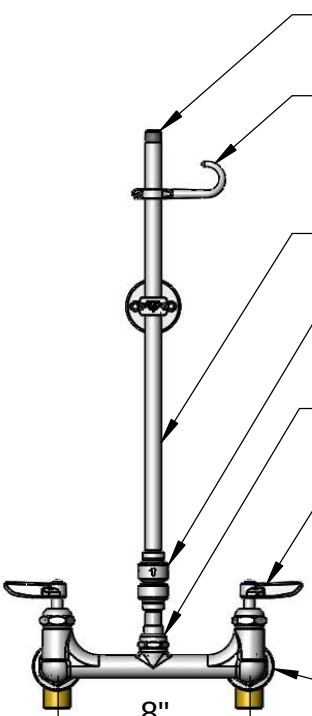

Product Specifications:

Pre-Rinse Unit: EasyInstall 8" Wall Mount Mixing Faucet, Quarter-Turn Cerama Cartridges w/ Check Valves, Lever Handles, 3/8" NPT Vacuum Breaker, 18" Riser, 6" Wall Bracket, 44" Flexible Stainless Steel Hose, 0.65 GPM Low Flow Spray Valve & 1/2" NPT Female Inlets

Product Compliance:

ASME A112.18.1 / CSA B125.1
NSF 61 - Section 9
NSF 372 (Low Lead Content)
EPAct 2005 (PRSV)
CSA B64.8 (VB)
EPA WaterSense (PRSV)

Drawn: JBC	Checked: JRM	Approved: JHB	Date: 09/30/16	Scale: 1:8	Sheet: 1 of 2

T&S BRASS AND BRONZE WORKS, INC.

2 Saddleback Cove / P.O. Box 1088
Travelers Rest, SC 29690

Travelers Rest, SC: 800-476-4103 • Simi Valley, CA: 800-423-0150 • Fax: 864-834-3518 • www.tsbrass.com

Model No.

B-2278-CR-C-EL

Item No.

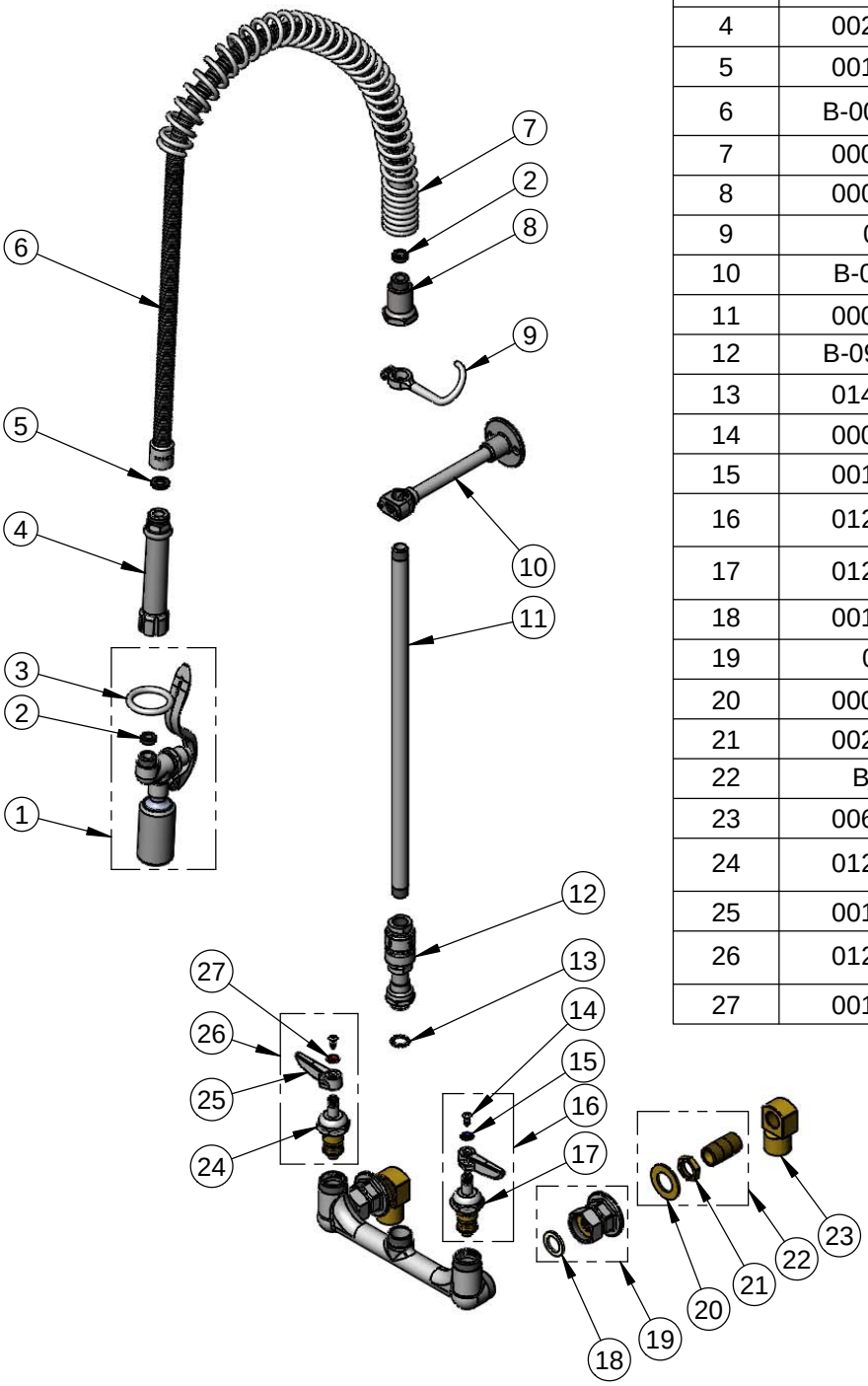

ITEM NO.	SALES NO.	DESCRIPTION
1	B-0107-C	0.65 GPM Low Flow Spray Valve
2	010476-45	#27 Washer
3	000907-45	Spray Valve Hold Down Ring
4	002987-40	Handle Grip
5	001014-45	Washer, B-0100 Hose Barrel
6	B-0044-H2A	44" Flexible Stainless Steel Hose (Less Handle)
7	000888-45	EasyInstall Overhead Spring
8	000821-40	Spring Body
9	004R	Finger Hook
10	B-0109-01	6" Wall Support
11	000369-40	3/8" NPT x 18" Riser
12	B-0970-FEZ	EasyInstall Vacuum Breaker
13	014200-45	Star Washer, Anti-Rotation
14	000922-45	Lever Handle Screw
15	001660-45	Blue Index-CW
16	012247-25	Quarter-Turn Cerama Cartridge, LTC w/ Check Valve, Handle, Index & Screw
17	012395-25	Quarter-Turn Cerama Cartridge, LTC w/ Check Valve
18	001019-45	Coupling Nut Washer
19	00AA	1/2" NPT Female Eccentric Flange
20	000999-45	Brass Lock Washer
21	002954-45	Shank Lock Nut
22	B-0425	1/2" x 2" Supply Nipple Kit
23	006895-20	1/2" NPT Fem x Fem Short El
24	012394-25	Quarter-Turn Cerama Cartridge,RTC w/ Check Valve
25	001638-45	Lever Handle
26	012246-25	Quarter-Turn Cerama Cartridge, RTC w/ Check Valve, Handle, Index & Screw
27	001661-45	Red Index-HW

Product Specifications:

Pre-Rinse Unit: EasyInstall 8" Wall Mount Mixing Faucet, Quarter-Turn Cerama Cartridges w/ Check Valves, Lever Handles, 3/8" NPT Vacuum Breaker, 18" Riser, 6" Wall Bracket, 44" Flexible Stainless Steel Hose, 0.65 GPM Low Flow Spray Valve & 1/2" NPT Female Inlets

Product Compliance:

ASME A112.18.1 / CSA B125.1
NSF 61 - Section 9
NSF 372 (Low Lead Content)
EPAct 2005 (PRSV)
CSA B64.8 (VB)
EPA WaterSense (PRSV)

Drawn: JBC	Checked: JRM	Approved: JHB	Date: 09/30/16	Scale: NTS	Sheet: 2 of 2