T&S BRASS AND BRONZE WORKS, INC.

2 Saddleback Cove / P.O. Box 1088
Travelers Rest, SC 29690

Travelers Rest, SC: 800-476-4103 • Simi Valley, CA: 800-423-0150 • Fax: 864-834-3518 • www.tsbrass.com

Model No.
B-1433-7212-01

Item No.

This Space for Architect/Engineer Approval

Job Name_____Date_____

Model Specified_____ Quantity_____

Customer/Wholesaler_____

Contractor_____

Architect/Engineer_____

EPAct 2005 Non-Compliant

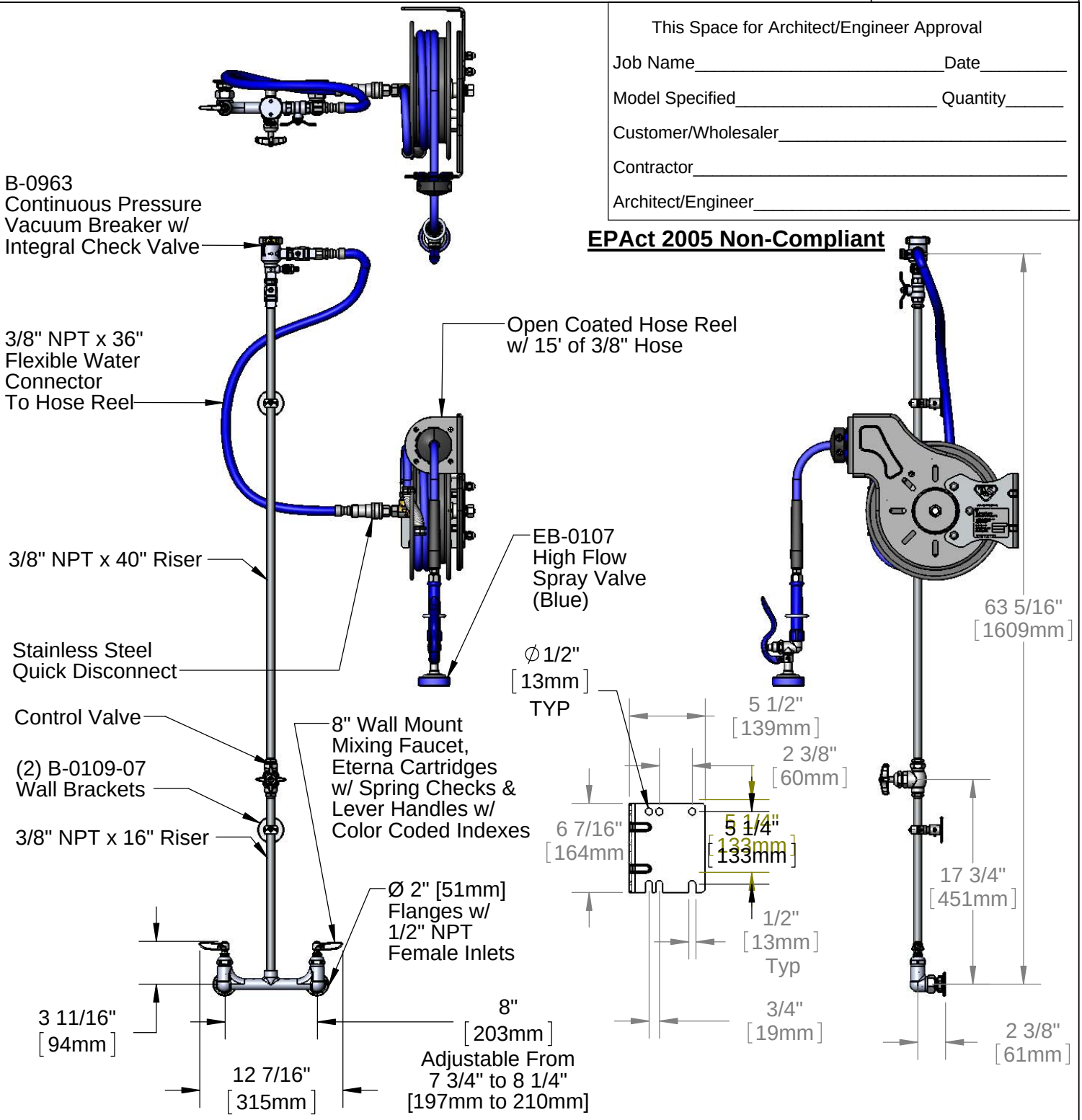

Product Specifications:
Open Coated Hose Reel w/ 15' of 3/8" Hose, EB-0107 Blue Spray Valve, Vacuum Breaker, 3/8" NPT Flexible Water Connector, 8" Wall Mount Mixing Faucet, & Control Valve

Drawn	Checked	Approved
JRM	KJG	JHB
Scale: 1:12		Date: 11/25/13

T&S BRASS AND BRONZE WORKS, INC.

2 Saddleback Cove / P.O. Box 1088
Travelers Rest, SC 29690

Travelers Rest, SC: 800-476-4103 • Simi Valley, CA: 800-423-0150 • Fax: 864-834-3518 • www.tsbrass.com

Model No.
B-1433-7212-01

Item No.

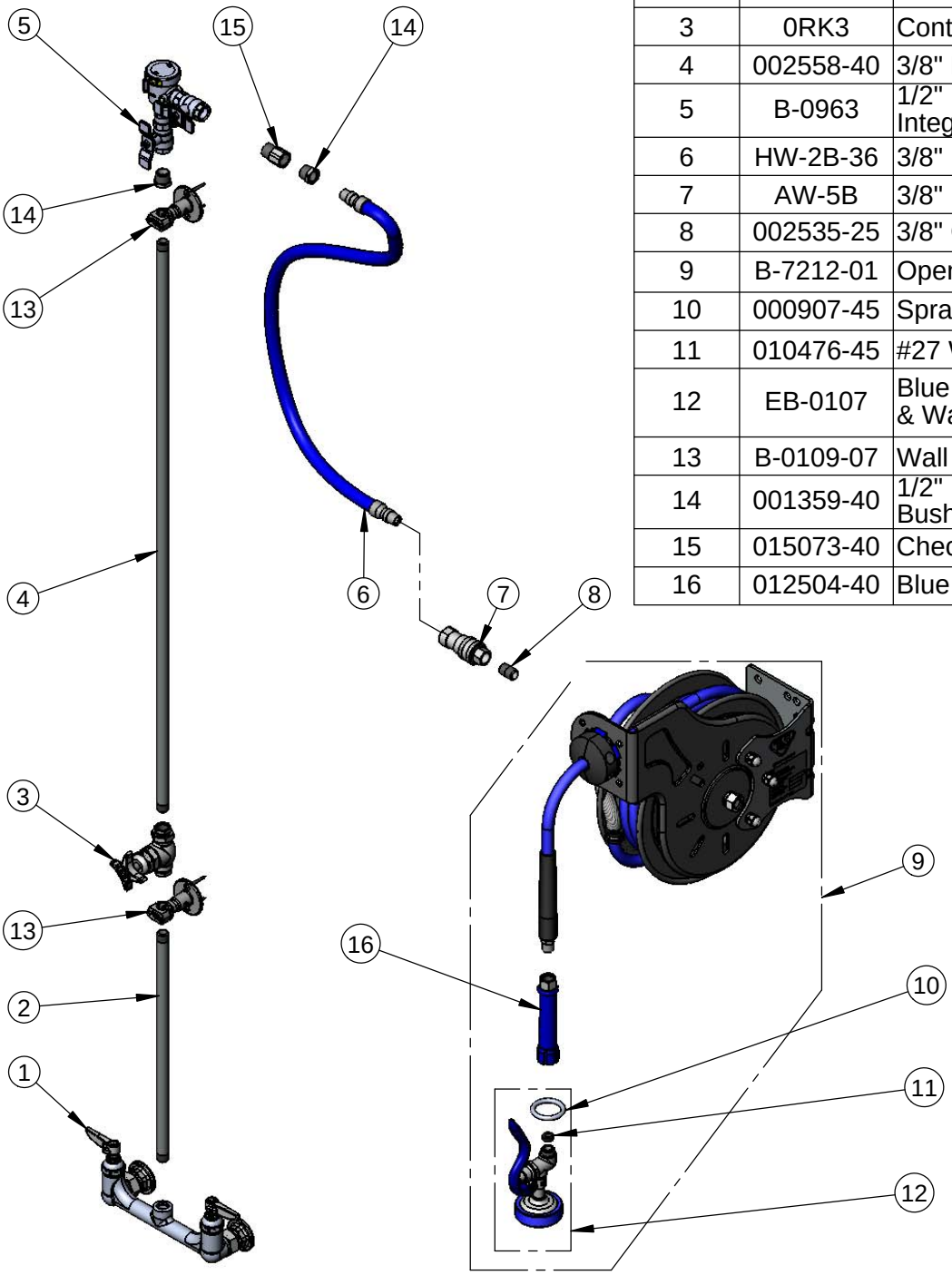

ITEM NO.	SALES NO.	DESCRIPTION
1	002832-40	8" Wall Mount Mixing Faucet
2	000368-40	3/8" NPT x 16" Riser
3	0RK3	Control Valve
4	002558-40	3/8" NPT x 40" Riser
5	B-0963	1/2" NPT Continuous Pressure VB w/ Integral Check Valve
6	HW-2B-36	3/8" NPT x 36" Flexible Water Hose
7	AW-5B	3/8" NPT Quick Disconnect
8	002535-25	3/8" Close Nipple
9	B-7212-01	Open Coated Reel w/ 15' of 3/8" Hose
10	000907-45	Spray Valve Hold Down Ring
11	010476-45	#27 Washer
12	EB-0107	Blue Spray Valve w/ Hold Down Ring & Washer
13	B-0109-07	Wall Bracket
14	001359-40	1/2" NPT Male x 3/8" NPT Male Hex Bushing
15	015073-40	Check Valve w/ 1/2" NPT Adapter
16	012504-40	Blue Grip Handle

Product Specifications:
Open Coated Hose Reel w/ 15' of 3/8" Hose, EB-0107 Blue Spray Valve, Vacuum Breaker, 3/8" NPT Flexible Water Connector, 8" Wall Mount Mixing Faucet, & Control Valve

Drawn	Checked	Approved
JRM	KJG	JHB
Scale: NTS		Date: 11/25/13