T&S BRASS AND BRONZE WORKS, INC.

2 Saddleback Cove / P.O. Box 1088
Travelers Rest, SC 29690

Travelers Rest, SC: 800-476-4103 • Simi Valley, CA: 800-423-0150 • Fax: 864-834-3518 • www.tsbrass.com

Model No.

B-1173-101-48H

Item No.

This Space for Architect/Engineer Approval

Job Name_____Date_____

Model Specified_____ Quantity_____

Customer/Wholesaler_____

Contractor_____

Architect/Engineer_____

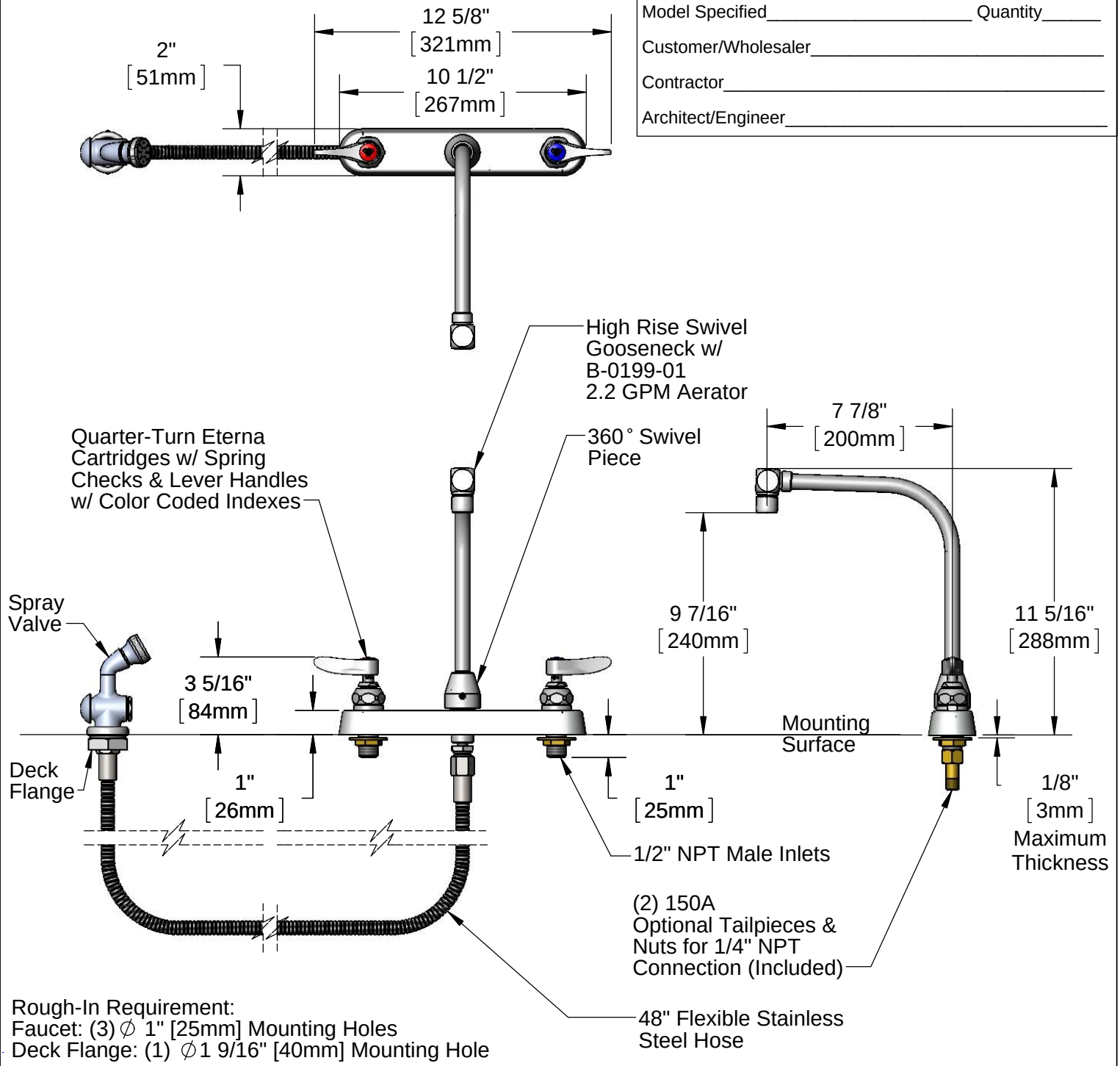

Rough-In Requirement:
Faucet: (3) ∅ 1" [25mm] Mounting Holes
Deck Flange: (1) ∅1 9/16" [40mm] Mounting Hole

Product Specifications:

8" Deck Mount Workboard Mixing Faucet, Quarter-Turn Eterna Cartridges w/ Spring Checks, Lever Handles, 16" Swing Nozzle, 2.2 GPM Aerator, 48" Flexible Stainless Steel Hose, Spray Valve, Deck Flange & 1/2" NPT Male Inlets

Product Compliance:

ASME A112.18.1 / CSA B125.1
NSF 61 - Section 9
NSF 372 (Low Lead Content)

Drawn: JBC	Checked: JRM	Approved: JHB	Date: 08/24/16	Scale: 1:6	Sheet: 1 of 2

T&S BRASS AND BRONZE WORKS, INC.

2 Saddleback Cove / P.O. Box 1088
Travelers Rest, SC 29690

Travelers Rest, SC: 800-476-4103 • Simi Valley, CA: 800-423-0150 • Fax: 864-834-3518 • www.tsbrass.com

Model No.

B-1173-101-48H

Item No.

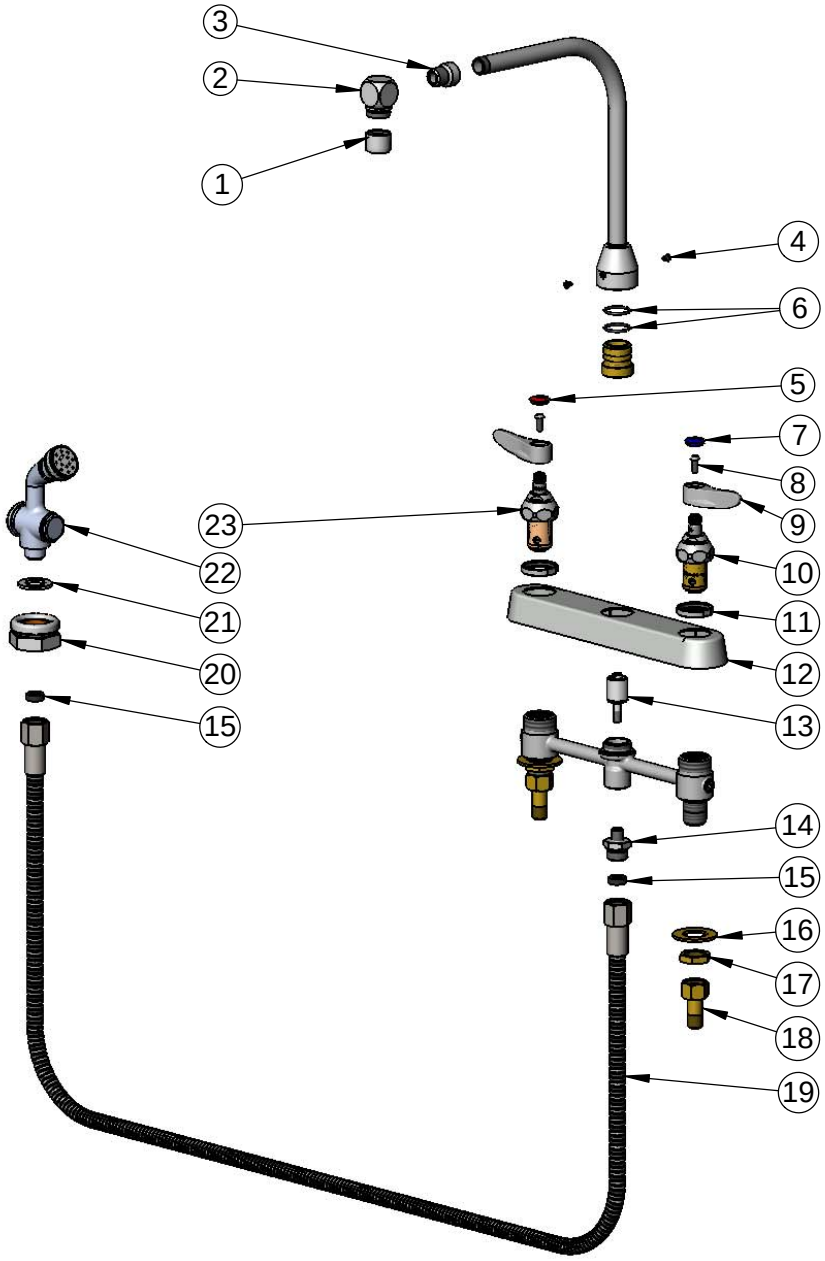

ITEM NO.	SALES NO.	DESCRIPTION
1	B-0199-01	2.2 GPM Aerator, 55/64"-27 UN Female
2	002823-40	Cube
3	000564-25	Adapter, 3/8 NPT Male x 5/8-27 Female
4	001486-45	Diverter Cover Screw
5	019364-45	Red Button Index, Press-in
6	001069-45	O-ring
7	019363-45	Blue Button Index, Press-in
8	000925-45	Lab Handle Screw
9	019361-45	Lever Handle (New Style)
10	019382-40	Quarter-Turn New Style Eterna Cartridge w/ Spring Check, LTC
11	019376-40	Escutcheon Lock Nut
12	019375-40	B-1120 Eterna Workboard Escutcheon
13	002338-45	Valve Diverter Piston
14	000542-25	1/8" NPT x 3/4-14 Male Adapter
15	010476-45	#27 Washer
16	000999-45	Brass Lock Washer
17	002954-45	Shank Lock Nut
18	150A	1/4" NPT Tailpiece & Nut
19	013E-48H	48" Flexible Stainless Steel Hose
20	B-KF	Protective Flange
21	001010-40	Washer, Stainless Steel
22	002857-40	016A Spray Valve
23	019383-40	Quarter-Turn New Style Eterna Cartridge w/ Spring Check, RTC

Product Specifications:

8" Deck Mount Workboard Mixing Faucet, Quarter-Turn Eterna Cartridges w/ Spring Checks, Lever Handles, 16" Swing Nozzle, 2.2 GPM Aerator, 48" Flexible Stainless Steel Hose, Spray Valve, Deck Flange & 1/2" NPT Male Inlets

Product Compliance:

ASME A112.18.1 / CSA B125.1
NSF 61 - Section 9
NSF 372 (Low Lead Content)

Drawn: JBC	Checked: JRM	Approved: JHB	Date: 08/24/16	Scale: NTS	Sheet: 2 of 2