T&S BRASS AND BRONZE WORKS, INC.

2 Saddleback Cove / P.O. Box 1088
Travelers Rest, SC 29690

Travelers Rest, SC: 800-476-4103 • Simi Valley, CA: 800-423-0150 • Fax: 864-834-3518 • www.tsbrass.com

Model No.

B-1101

Item No.

This Space for Architect/Engineer Approval

Job Name_____Date_____

Model Specified_____ Quantity_____

Customer/Wholesaler_____

Contractor_____

Architect/Engineer_____

ADA Compliant

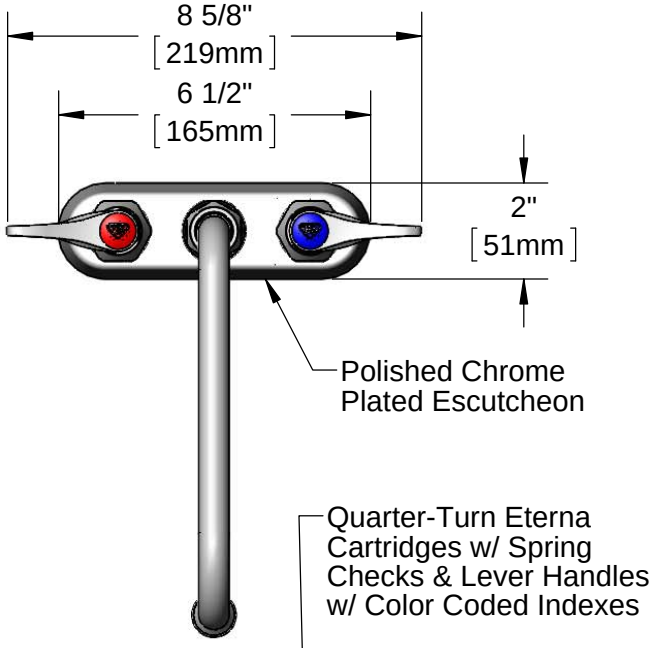

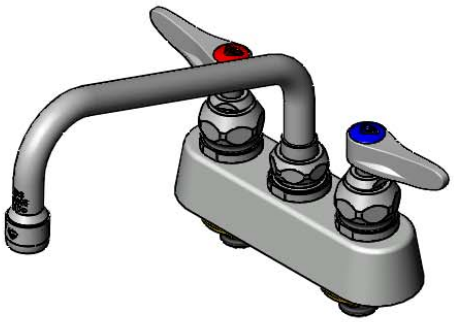

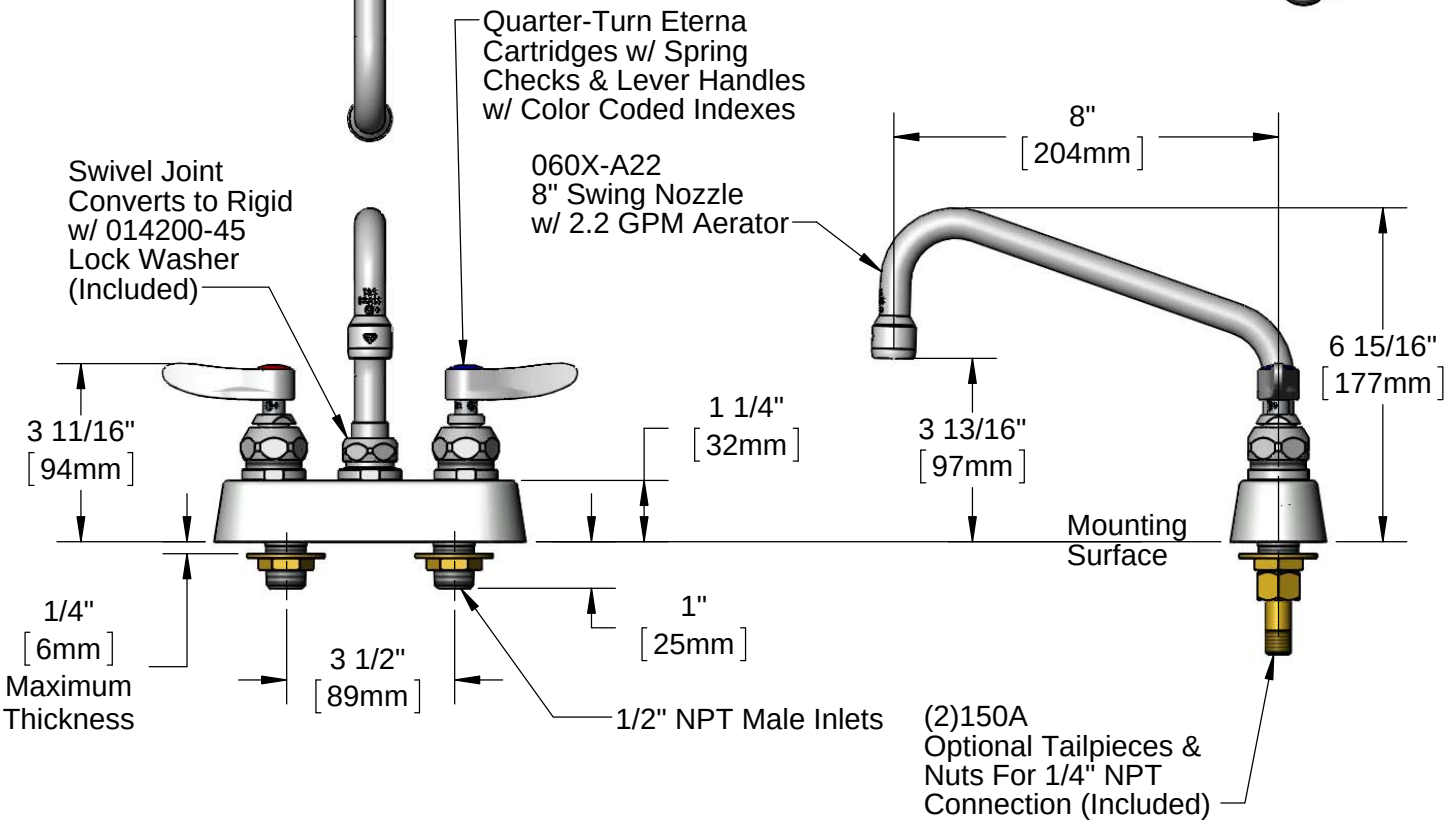

Rough-In Requirement:
(2) ∅1" [25mm] Mounting Holes

Product Specifications:

3 1/2" Deck Mount Workboard Faucet, Quarter-Turn Eterna Cartridges w/ Spring Checks, Lever Handles, 8" Swing Nozzle, 2.2 GPM Aerator & 1/2" NPT Male Inlets

Product Compliance:

ASME A112.18.1 / CSA B125.1
NSF 61 - Section 9
NSF 372 (Low Lead Content)
ANSI A117.1 (ADA)

Drawn: DMH	Checked: JRM	Approved: JHB	Date: 06/01/16	Scale: 1:4	Sheet: 1 of 2

T&S BRASS AND BRONZE WORKS, INC.

2 Saddleback Cove / P.O. Box 1088
Travelers Rest, SC 29690

Travelers Rest, SC: 800-476-4103 • Simi Valley, CA: 800-423-0150 • Fax: 864-834-3518 • www.tsbrass.com

Model No.

B-1101

Item No.

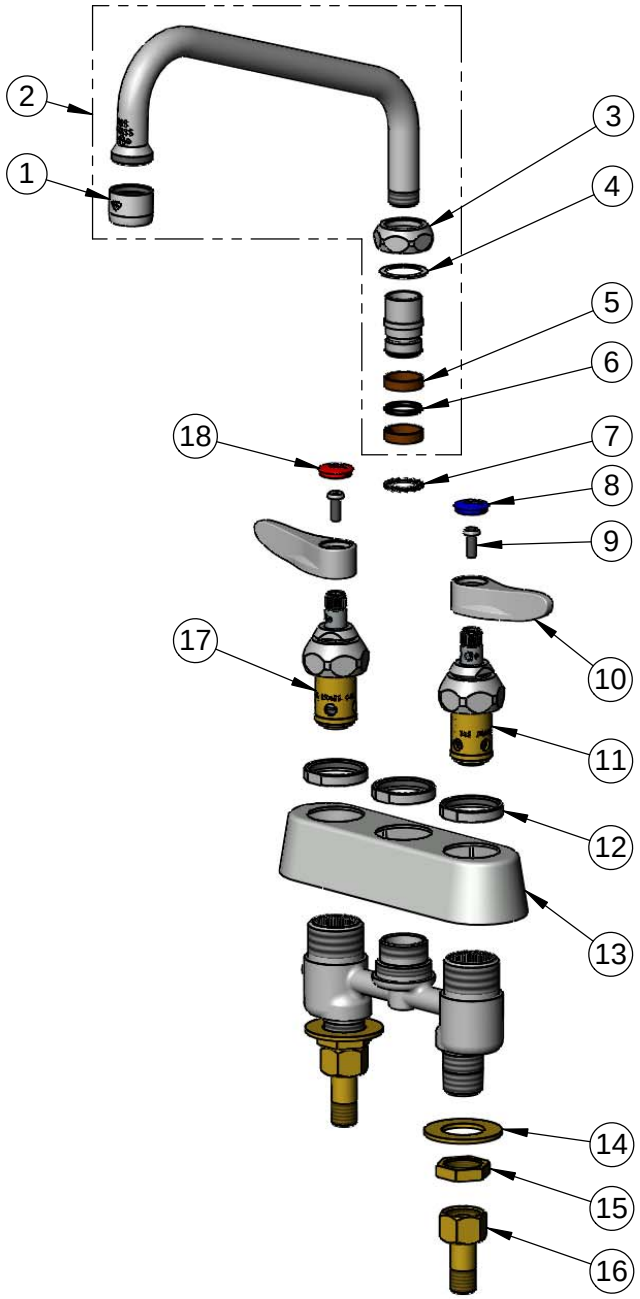

ITEM NO.	SALES NO.	DESCRIPTION
1	B-0199-01	2.2 GPM Aerator, 55/64"-27 UN Female
2	060X-A22	8" Swing Nozzle w/ 2.2 GPM Aerator
3	019360-40	Swivel Nut (New Style)
4	009538-45	Swivel Washer
5	011429-45	Swivel Sleeves (2)
6	001074-45	O-Ring
7	014200-45	Star Washer, Anti-Rotation
8	019363-45	Blue Button Index, Press-in
9	000925-45	Lab Handle Screw
10	019361-45	Lever Handle (New Style)
11	019382-40	Quarter-Turn New Style Eterna Cartridge w/ Spring Check, LTC
12	019376-40	Escutcheon Lock Nut
13	019356-40	B-1100 Eterna Workboard Escutcheon
14	000999-45	Brass Lock Washer
15	002954-45	Shank Lock Nut
16	150A	1/4" NPT Tailpiece & Nut
17	019383-40	Quarter-Turn New Style Eterna Cartridge w/ Spring Check, RTC
18	019364-45	Red Button Index, Press-in

Product Specifications:

3 1/2" Deck Mount Workboard Faucet, Quarter-Turn Eterna Cartridges w/ Spring Checks, Lever Handles, 8" Swing Nozzle, 2.2 GPM Aerator & 1/2" NPT Male Inlets

Product Compliance:

ASME A112.18.1 / CSA B125.1
NSF 61 - Section 9
NSF 372 (Low Lead Content)
ANSI A117.1 (ADA)

Drawn: DMH	Checked: JRM	Approved: JHB	Date: 06/01/16	Scale: NTS	Sheet: 2 of 2