T&S BRASS AND BRONZE WORKS, INC.

2 Saddleback Cove / P.O. Box 1088
Travelers Rest, SC 29690

Travelers Rest, SC: 800-476-4103 • Simi Valley, CA: 800-423-0150 • Fax: 864-834-3518 • www.tsbrass.com

Model No.

B-0870

Item No.

This Space for Architect/Engineer Approval

Job Name_____Date_____

Model Specified_____ Quantity_____

Customer/Wholesaler_____

Contractor_____

Architect/Engineer_____

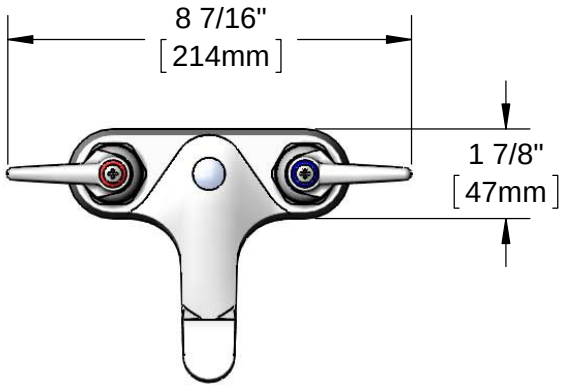

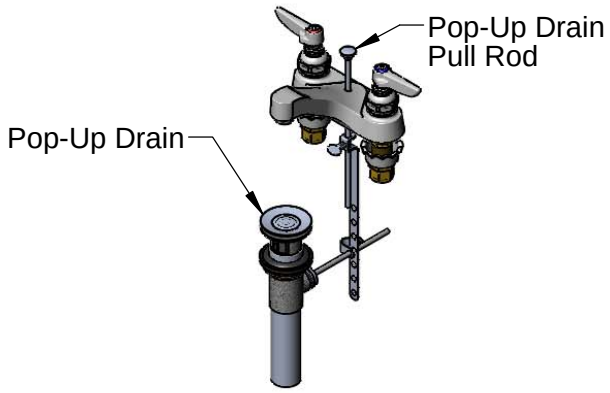

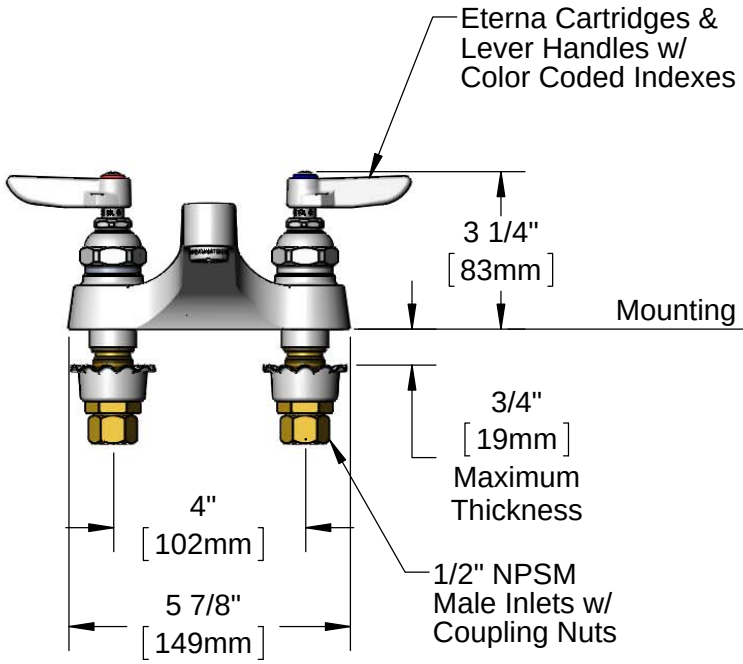

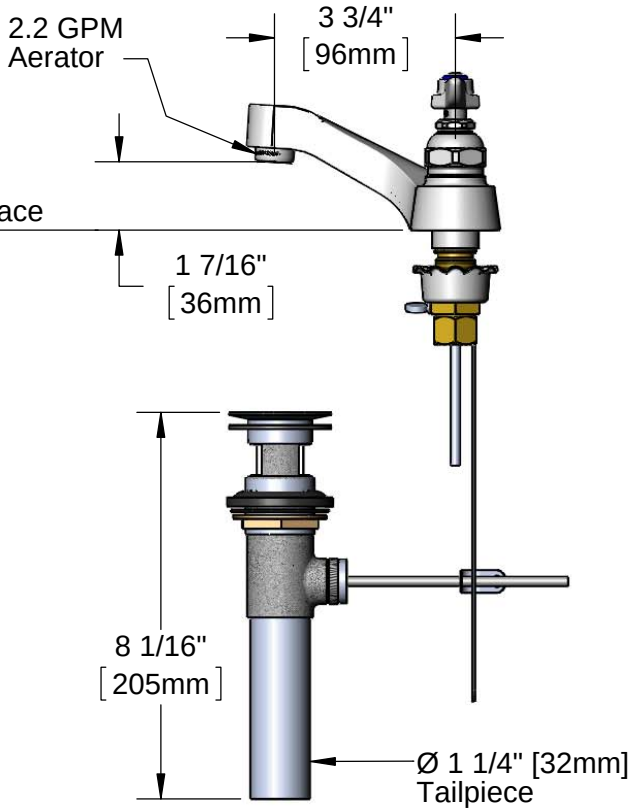

Rough-In Requirement:
(2) Ø 1 1/8" [29mm] Mounting Holes

Product Specifications:

4" Centerset Deck Mount Faucet, Eterna Cartridges, Lever Handles, 2.2 GPM Aerator Outlet, Pop-Up Drain & 1/2" NPSM Male Inlets w/ Coupling Nuts

Product Compliance:

ASME A112.18.1 / CSA B125.1
NSF 61 - Section 9
NSF 372 (Low Lead Content)
ANSI A117.1 (ADA)

Drawn: KJG	Checked: JRM	Approved: JHB	Date: 08/14/14	Scale: 1:4	Sheet: 1 of 2

T&S BRASS AND BRONZE WORKS, INC.

2 Saddleback Cove / P.O. Box 1088
Travelers Rest, SC 29690

Travelers Rest, SC: 800-476-4103 • Simi Valley, CA: 800-423-0150 • Fax: 864-834-3518 • www.tsbrass.com

Model No.

B-0870

Item No.

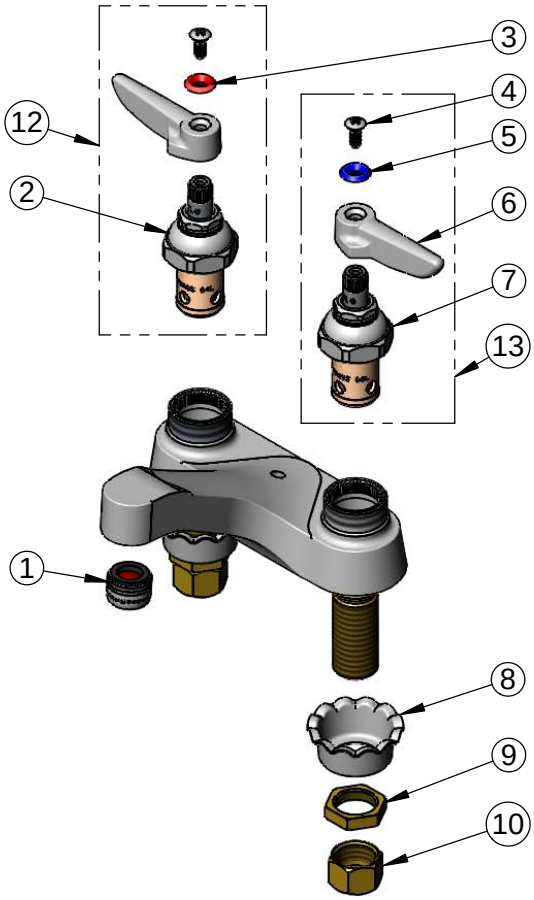

ITEM NO.	SALES NO.	DESCRIPTION
1	B-0199-03	2.2 GPM Aerator, 13/16-27 UN Male
2	005960-40	Eterna Cartridge, RTC
3	001661-45	Red Index-HW
4	000922-45	Lever Handle Screw
5	001660-45	Blue Index-CW
6	001638-45	Lever Handle
7	005959-40	Eterna Cartridge, LTC
8	001000-45	Rosette Washer
9	002954-45	Shank Lock Nut
10	000958-20	Coupling Nut
11	B-0898	Sink Drain w/ Pop-Up
12	002714-40	Eterna Cartridge, RTC w/ Handle, Index & Screw
13	002713-40	Eterna Cartridge, LTC w/ Handle, Index & Screw

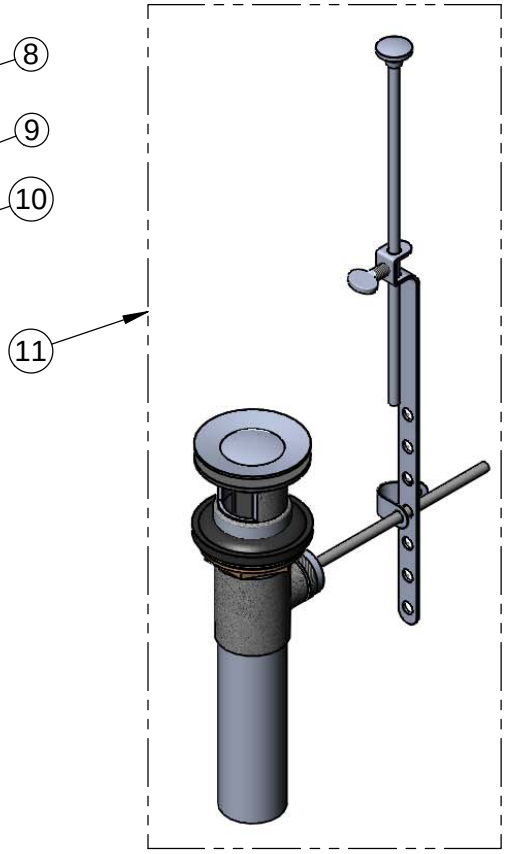

Product Specifications:

4" Centerset Deck Mount Faucet, Eterna Cartridges, Lever Handles, 2.2 GPM Aerator Outlet, Pop-Up Drain & 1/2" NPSM Male Inlets w/ Coupling Nuts

Product Compliance:

ASME A112.18.1 / CSA B125.1
NSF 61 - Section 9
NSF 372 (Low Lead Content)
ANSI A117.1 (ADA)

Drawn: KJG	Checked: JRM	Approved: JHB	Date: 08/14/14	Scale: NTS	Sheet: 2 of 2