T&S BRASS AND BRONZE WORKS, INC.

2 Saddleback Cove / P.O. Box 1088
Travelers Rest, SC 29690

Travelers Rest, SC: 800-476-4103 • Simi Valley, CA: 800-423-0150 • Fax: 864-834-3518 • www.tsbrass.com

Model No.

B-0689

Item No.

This Space for Architect/Engineer Approval

Job Name_____Date_____

Model Specified_____ Quantity_____

Customer/Wholesaler_____

Contractor_____

Architect/Engineer_____

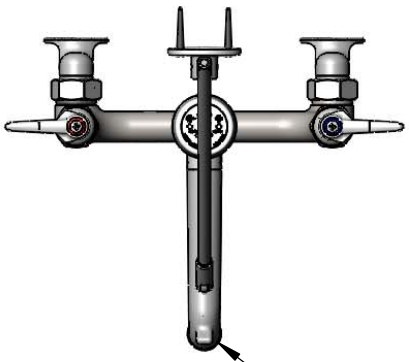

ADA Compliant

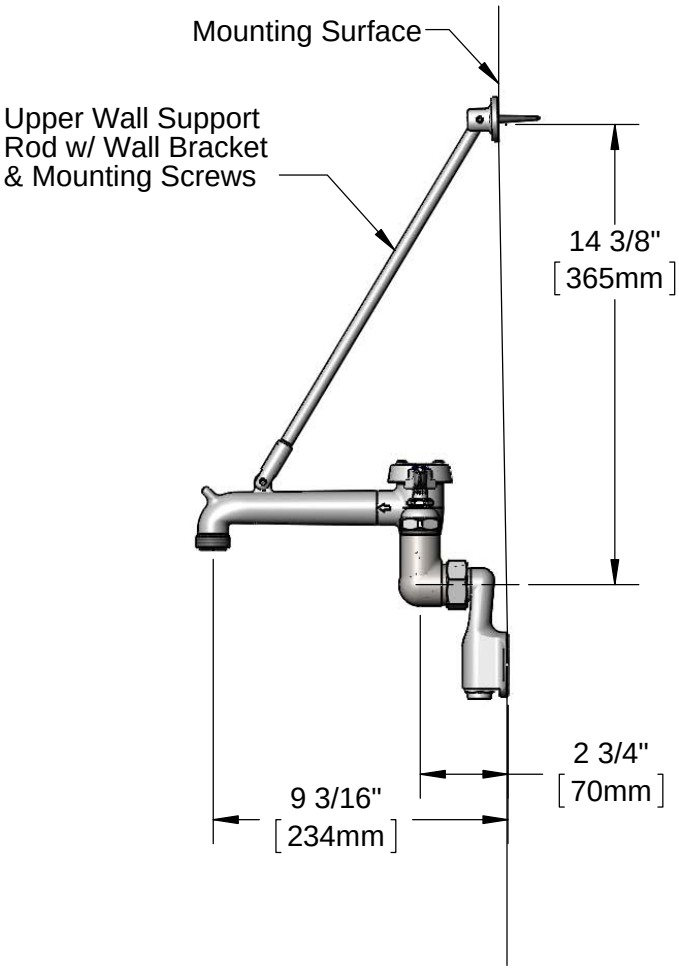

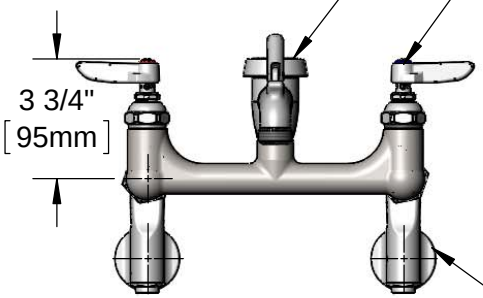

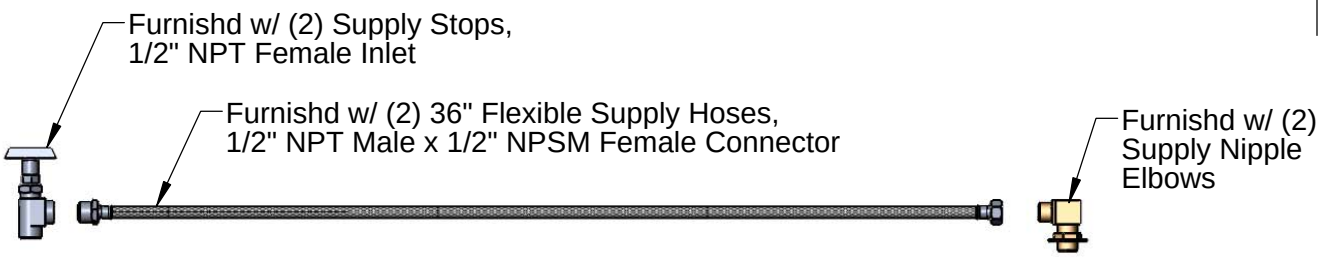

Product Specifications:

Adjustable Wall Mount Service Sink Faucet, Quarter-Turn Eterna Cartridges w/ Spring Checks, Lever Handles, 1/2" NPT Adjustable Inlets w/ Supply Stops, Male Garden Hose Outlet, Polished Chrome Finish & 1/2" NPT Vacuum Breaker

Product Compliance:

ASME A112.18.1 / CSA B125.1
NSF 61 - Section 9
NSF 372 (Low Lead Content)
ANSI A117.1 (ADA)
ASSE 1001 (VB)

Drawn: JBC	Checked: JRM	Approved: JHB	Date: 08/24/16	Scale: 1:6	Sheet: 1 of 2

T&S BRASS AND BRONZE WORKS, INC.

2 Saddleback Cove / P.O. Box 1088
Travelers Rest, SC 29690

Travelers Rest, SC: 800-476-4103 • Simi Valley, CA: 800-423-0150 • Fax: 864-834-3518 • www.tsbrass.com

Model No.

B-0689

Item No.

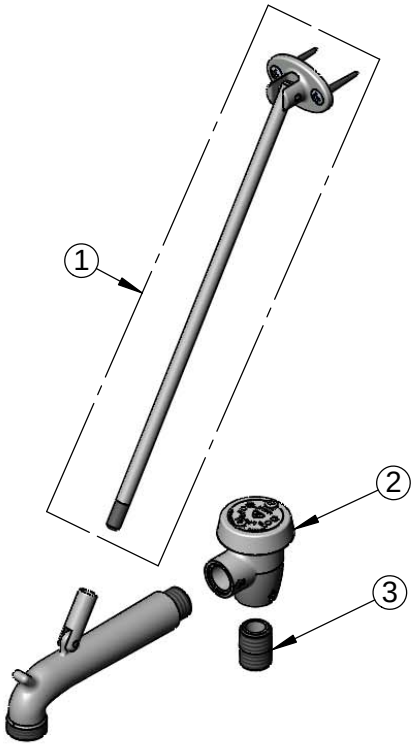

ITEM NO.	SALES NO.	DESCRIPTION
1	009546-40	Suprt Rod B-0665 - Polish Chrome
2	B-0969	1/2" NPT Vacuum Breaker
3	002534-25	Close Nipple, 1/2" NPT
4	001661-45	Red Index-HW
5	001638-45	Lever Handle
6	012443-40	Quarter-Turn Eterna Cartridge, RTC w/ Spring Check
7	002712-40	Quarter-Turn Eterna Cartridge, RTC w/ Spring Check, Handle, Index & Screw
8	000922-45	Lever Handle Screw
9	001660-45	Blue Index-CW
10	002711-40	Quarter-Turn Eterna Cartridge, LTC w/ Spring Check, Handle, Index & Screw
11	012442-40	Quarter-Turn Eterna Cartridge, LTC w/ Spring Check
12	001019-45	Coupling Nut Washer
13	00XX	1/2" NPT Adjustable Inlet Flange w/ Screw Driver Stop
14	163A	Built-In Service Stop
15	B-0418	Supply Stop w/ 1/2" NPT Inlet
16	013121-45	Flexible Supply Hoses, 36" w/ 1/2" NPT Male and 1/2" NPSM Female
17	B-0230-K	Elbow Kit, Supply Nipple (2 Per Kit)

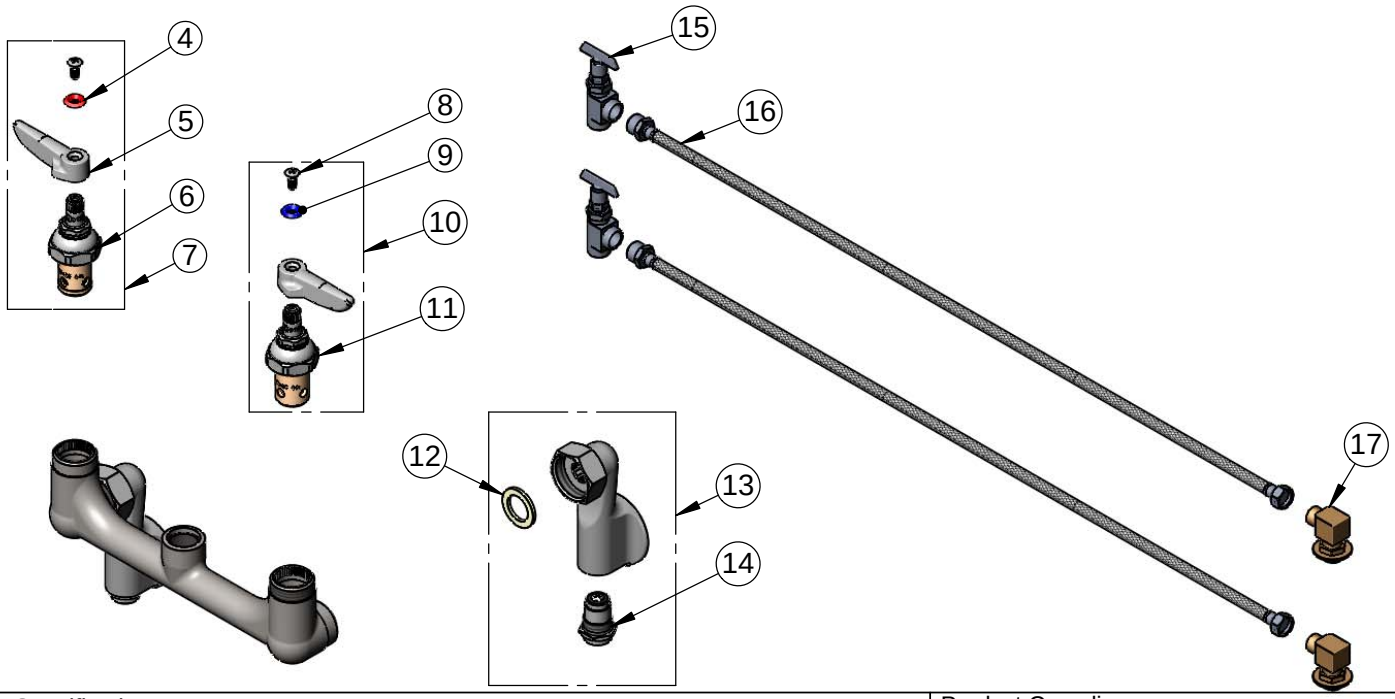

Product Specifications:

Adjustable Wall Mount Service Sink Faucet, Quarter-Turn Eterna Cartridges w/ Spring Checks, Lever Handles, 1/2" NPT Adjustable Inlets w/ Supply Stops, Male Garden Hose Outlet, Polished Chrome Finish & 1/2" NPT Vacuum Breaker

Product Compliance:

ASME A112.18.1 / CSA B125.1
NSF 61 - Section 9
NSF 372 (Low Lead Content)
ANSI A117.1 (ADA)
ASSE 1001 (VB)

Drawn: JBC	Checked: JRM	Approved: JHB	Date: 08/24/16	Scale: NTS	Sheet: 2 of 2