T&S BRASS AND BRONZE WORKS, INC.

2 Saddleback Cove / P.O. Box 1088
Travelers Rest, SC 29690

Travelers Rest, SC: 800-476-4103 • Simi Valley, CA: 800-423-0150 • Fax: 864-834-3518 • www.tsbrass.com

Model No.
B-0330-01-W4F12

Item No.

ADA Compliant

This Space for Architect/Engineer Approval

Job Name_____Date_____

Model Specified_____ Quantity_____

Customer/Wholesaler_____

Contractor_____

Architect/Engineer_____

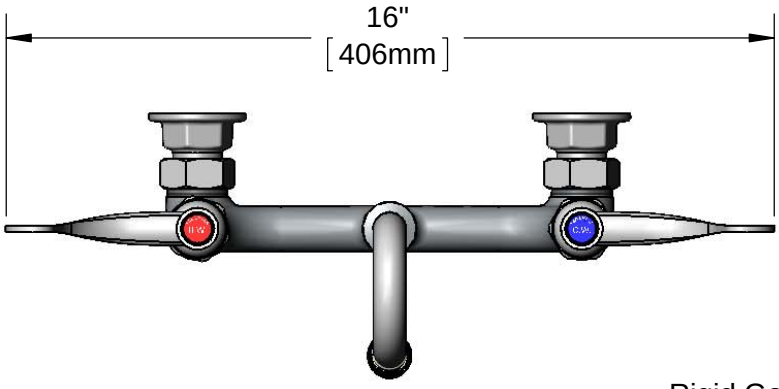

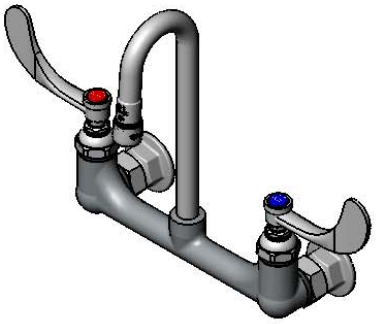

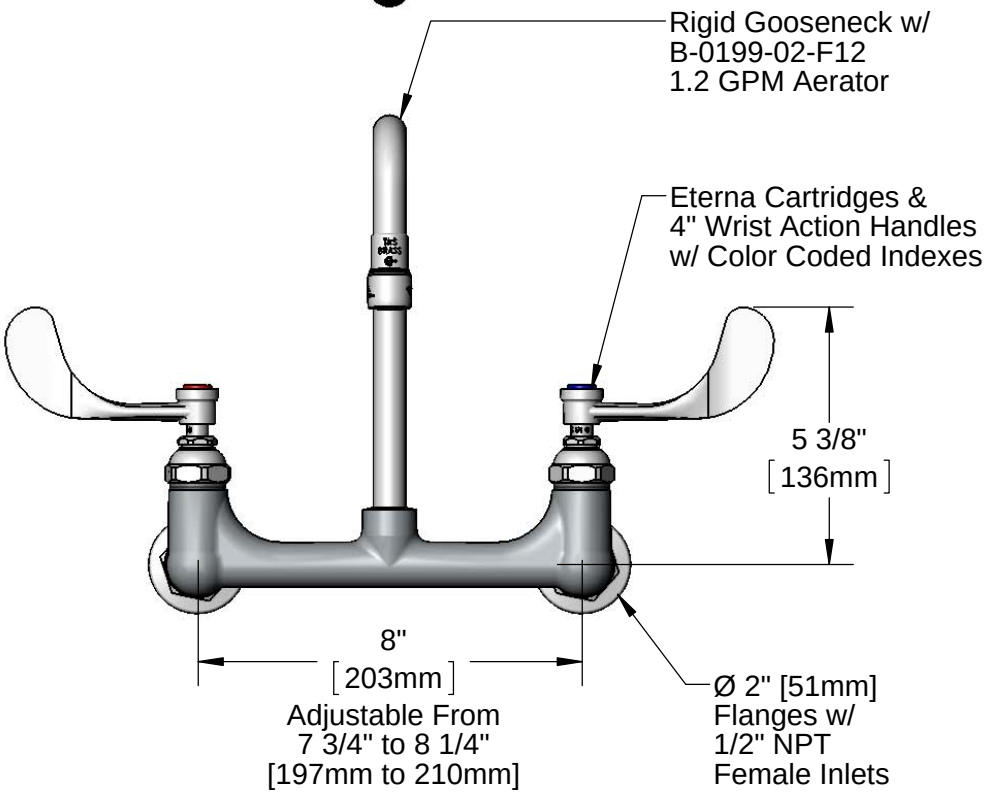

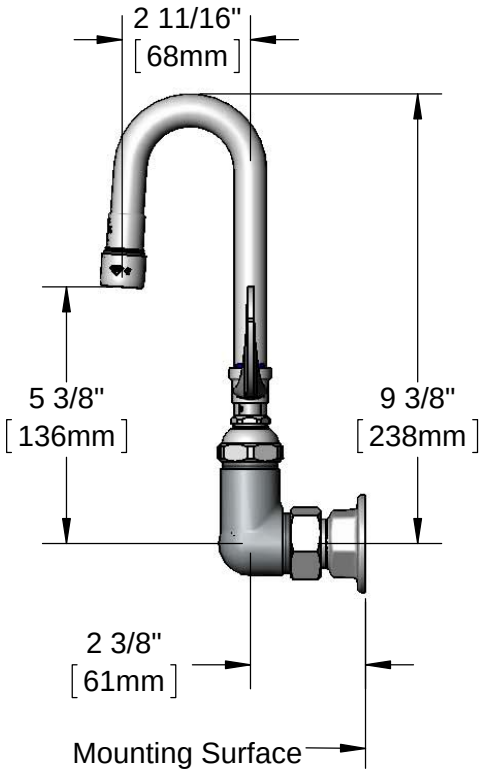

Product Specifications:

8" Wall Mount Mixing Faucet, Eterna Cartridges, Rigid Gooseneck w/ 1.2 GPM Aerator, 4" Wrist Action Handles & 1/2" NPT Female Inlets

Product Compliance:

ASME A112.18.1 / CSA B125.1
NSF 61 - Section 9
NSF 372 (Low Lead Content)
ANSI A117.1 (ADA)
EPA WaterSense

Drawn: KJG	Checked: JRM	Approved: JHB	Date: 09/01/16	Scale: 1:4	Sheet: 1 of 2

T&S BRASS AND BRONZE WORKS, INC.

2 Saddleback Cove / P.O. Box 1088
Travelers Rest, SC 29690

Travelers Rest, SC: 800-476-4103 • Simi Valley, CA: 800-423-0150 • Fax: 864-834-3518 • www.tsbrass.com

Model No.

B-0330-01-W4F12

Item No.

ITEM NO.	SALES NO.	DESCRIPTION
1	B-0199-02-F12	1.2 GPM Aerator, 3/8" NPSM Male
2	044A	3/8" to Aerator Adapter
3	001043-45	Washer
4	001194-45	Red Index - HW
5	000925-45	Lab Handle Screw
6	B-WH4H	4" Wrist Action Handle, Screw & Hot Index
7	001686-45	Blue Index - CW
8	B-WH4C	4" Wrist Action Handle, Screw & Cold Index
9	B-WH4	4" Wrist Action Handle
10	006010-40	Eterna Cartridge, RTC (Teflon)
11	006009-40	Eterna Cartridge, LTC (Teflon)
12	001019-45	Coupling Nut Washer
13	00AA	1/2" NPT Female Eccentric Flange
14	B-0199-01-F12	1.2 GPM Aerator, 55/64-27 UN Female

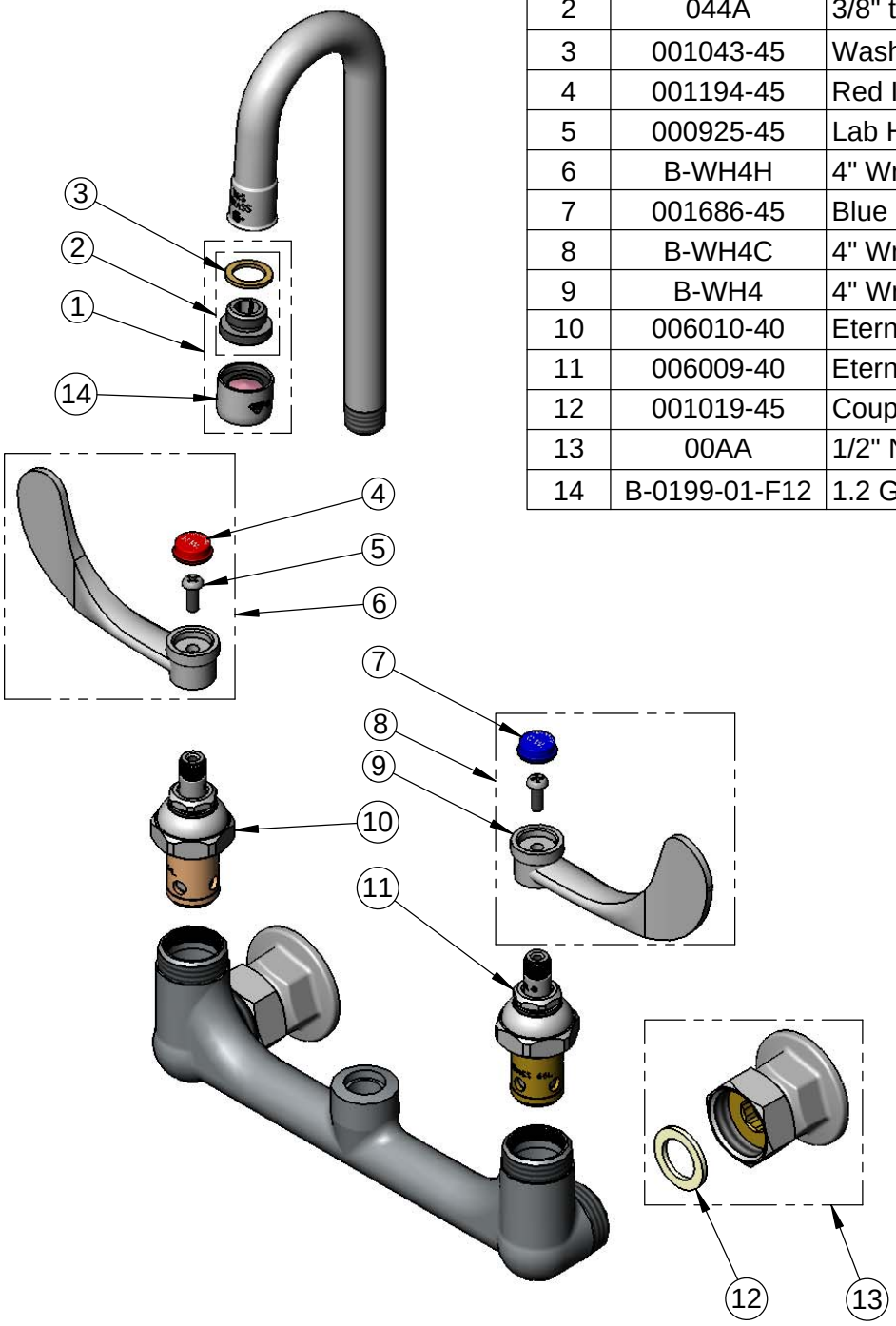

Product Specifications:

8" Wall Mount Mixing Faucet, Eterna Cartridges, Rigid Gooseneck w/ 1.2 GPM Aerator, 4" Wrist Action Handles & 1/2" NPT Female Inlets

Product Compliance:

ASME A112.18.1 / CSA B125.1
NSF 61 - Section 9
NSF 372 (Low Lead Content)
ANSI A117.1 (ADA)
EPA WaterSense

Drawn: KJG	Checked: JRM	Approved: JHB	Date: 09/01/16	Scale: NTS	Sheet: 2 of 2