T&S BRASS AND BRONZE WORKS, INC.

2 Saddleback Cove / P.O. Box 1088
Travelers Rest, SC 29690

Travelers Rest, SC: 800-476-4103 • Simi Valley, CA: 800-423-0150 • Fax: 864-834-3518 • www.tsbrass.com

Model No.

B-0322

Item No.

ADA Compliant

This Space for Architect/Engineer Approval

Job Name_____Date_____

Model Specified_____ Quantity_____

Customer/Wholesaler_____

Contractor_____

Architect/Engineer_____

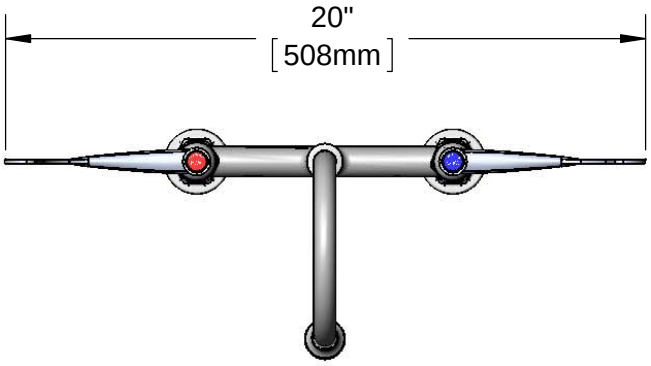

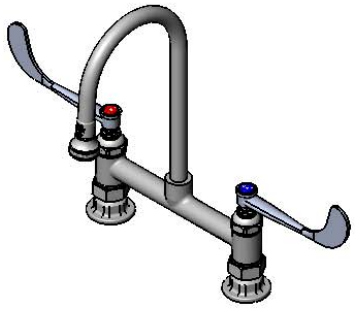

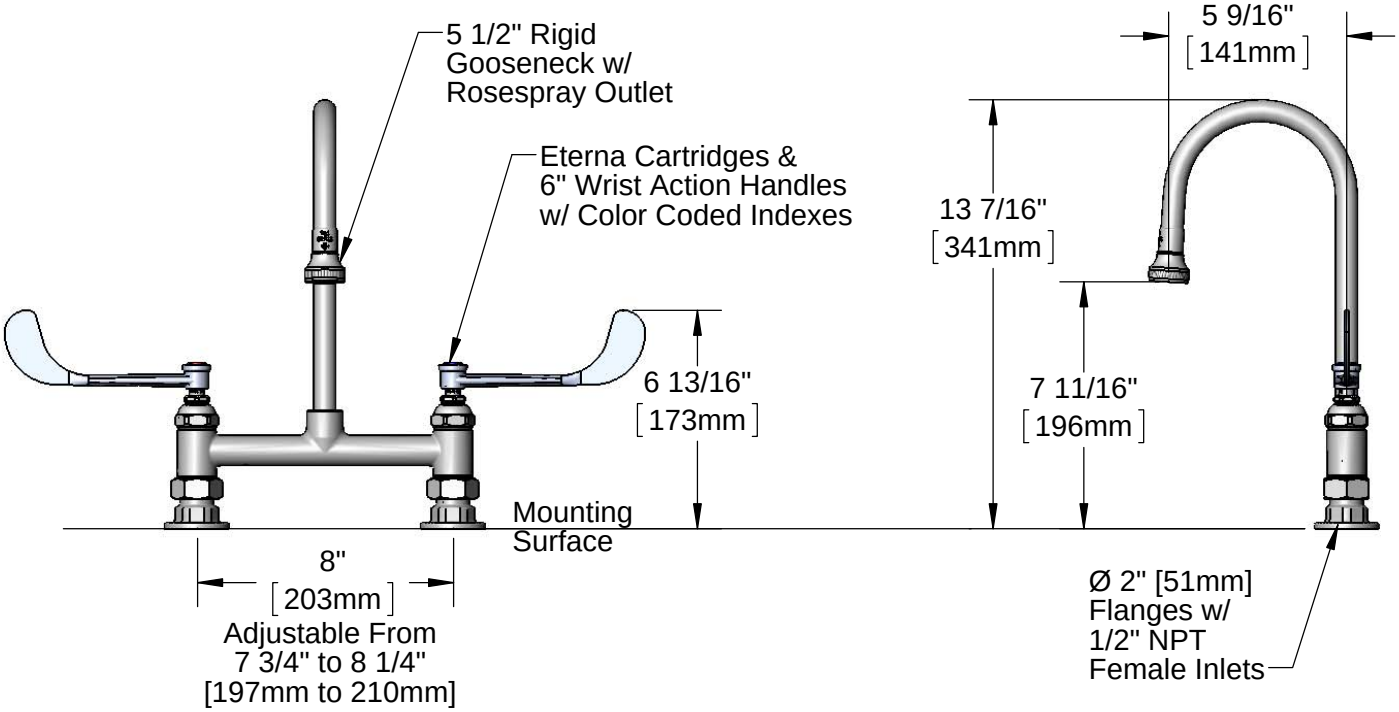

Product Specifications:

8" Deck Mount Mixing Faucet w/ Eterna Cartridges, 6" Wrist Action Handles, 5 1/2" Rigid Gooseneck w/ Rosespray Outlet & 1/2" NPT Female Inlets

Product Compliance:

ASME A112.18.1 / CSA B125.1
NSF 61 - Section 9
NSF 372 (Low Lead Content)
ANSI A117.1 (ADA)

Drawn: JBC	Checked: JRM	Approved: JHB	Date: 06/22/16	Scale: 1:6	Sheet: 1 of 2

T&S BRASS AND BRONZE WORKS, INC.

2 Saddleback Cove / P.O. Box 1088
Travelers Rest, SC 29690

Travelers Rest, SC: 800-476-4103 • Simi Valley, CA: 800-423-0150 • Fax: 864-834-3518 • www.tsbrass.com

Model No.

B-0322

Item No.

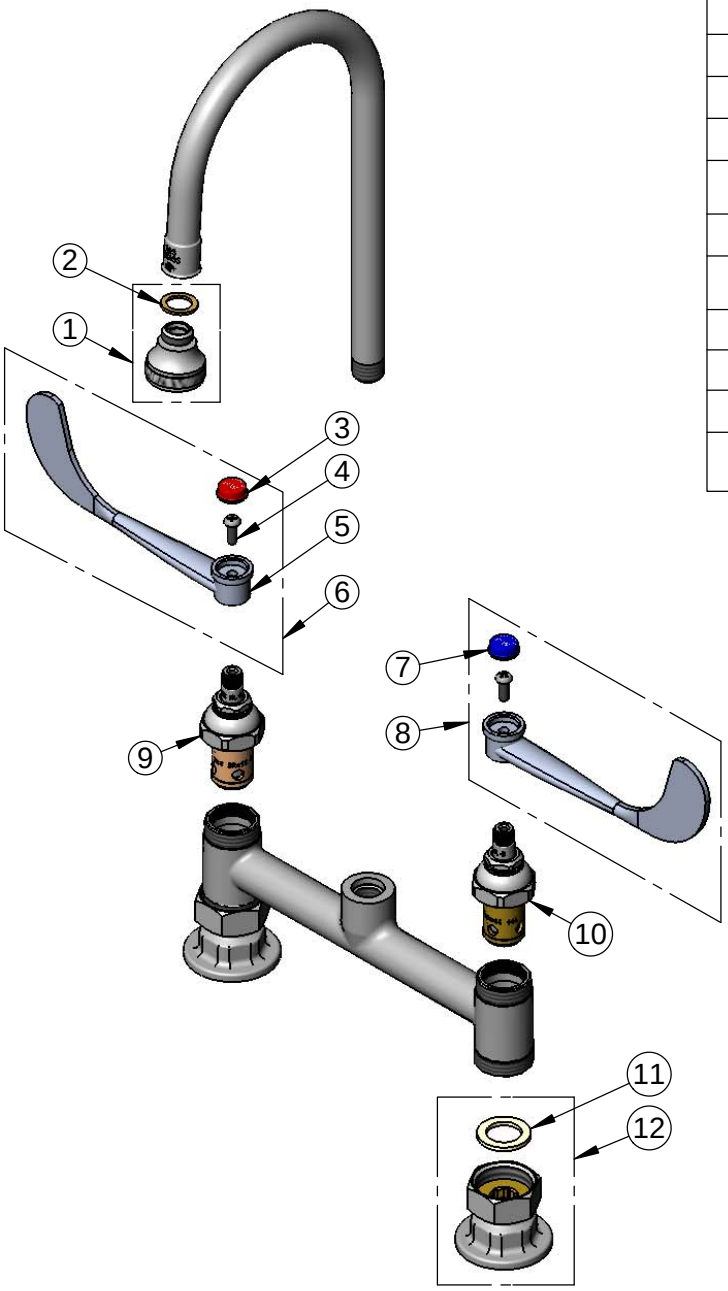

ITEM NO.	SALES NO.	DESCRIPTION
1	B-0103	Rosespray w/ Washer
2	001043-45	Washer
3	001194-45	Red Index - HW
4	000925-45	Lab Handle Screw
5	B-WH6	6" Wrist Action Handle
6	B-WH6H	6" Wrist Action Handle, Screw & Hot Index
7	001686-45	Blue Index - CW
8	B-WH6C	6" Wrist Action Handle, Screw & Cold Index
9	006010-40	Eterna Cartridge, RTC
10	006009-40	Eterna Cartridge, LTC
11	001019-45	Coupling Nut Washer
12	00AA	1/2" NPT Female Eccentric Flange

Product Specifications:

8" Deck Mount Mixing Faucet w/ Eterna Cartridges, 6" Wrist Action Handles, 5 1/2" Rigid Gooseneck w/ Rosespray Outlet & 1/2" NPT Female Inlets

Product Compliance:

ASME A112.18.1 / CSA B125.1
NSF 61 - Section 9
NSF 372 (Low Lead Content)
ANSI A117.1 (ADA)

Drawn: JBC	Checked: JRM	Approved: JHB	Date: 06/22/16	Scale: NTS	Sheet: 2 of 2