# T&S BRASS AND BRONZE WORKS, INC.

**2 Saddleback Cove / P.O. Box 1088**
**Travelers Rest, SC 29690**

Travelers Rest, SC: 800-476-4103 • Simi Valley, CA: 800-423-0150 • Fax: 864-834-3518 • www.tsbrass.com

Model No.

**B-0319-04**

Item No.

This Space for Architect/Engineer Approval

Job Name_____Date_____

Model Specified_____ Quantity_____

Customer/Wholesaler_____

Contractor_____

Architect/Engineer_____

**ADA Compliant**

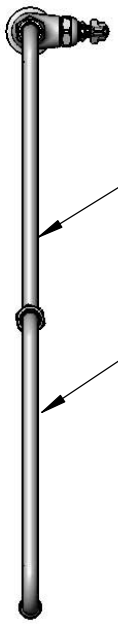


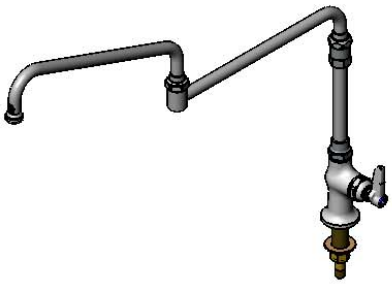

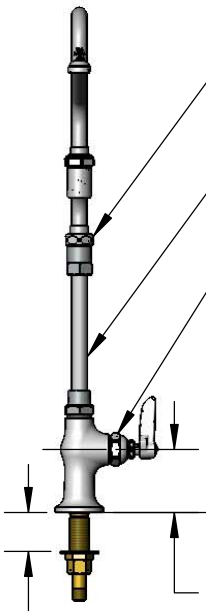


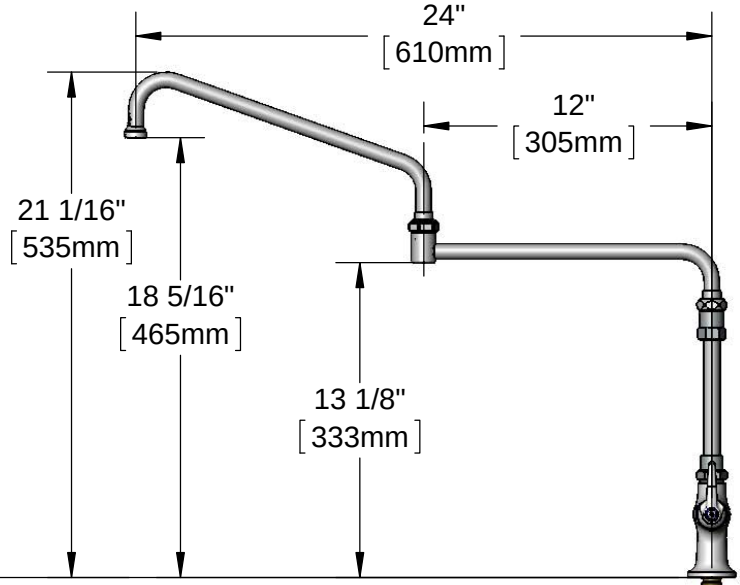


Rough-In Requirement:
∅ 1" [25mm] Mounting Hole

Product Specifications:

Single Hole Single Temperature Deck Mount Faucet, Eterna Cartridge, Lever Handle, 24" Double Joint Swing Nozzle w/ Swivel Body & Stream Regulator Outlet, 7 5/8" Extension and 1/2" NPT Male Inlet

Product Compliance:

ASME A112.18.1 / CSA B125.1
NSF 61 - Section 9
NSF 372 (Low Lead Content)
ANSI A117.1 (ADA)

| Drawn: JBC | Checked: JRM | Approved: JHB | Date: 06/22/16 | Scale: 1:8 | Sheet: 1 of 2 |
|---|---|---|---|---|---|

# T&S BRASS AND BRONZE WORKS, INC.

**2 Saddleback Cove / P.O. Box 1088**
**Travelers Rest, SC 29690**

Travelers Rest, SC: 800-476-4103 • Simi Valley, CA: 800-423-0150 • Fax: 864-834-3518 • www.tsbrass.com

Model No.

**B-0319-04**

Item No.

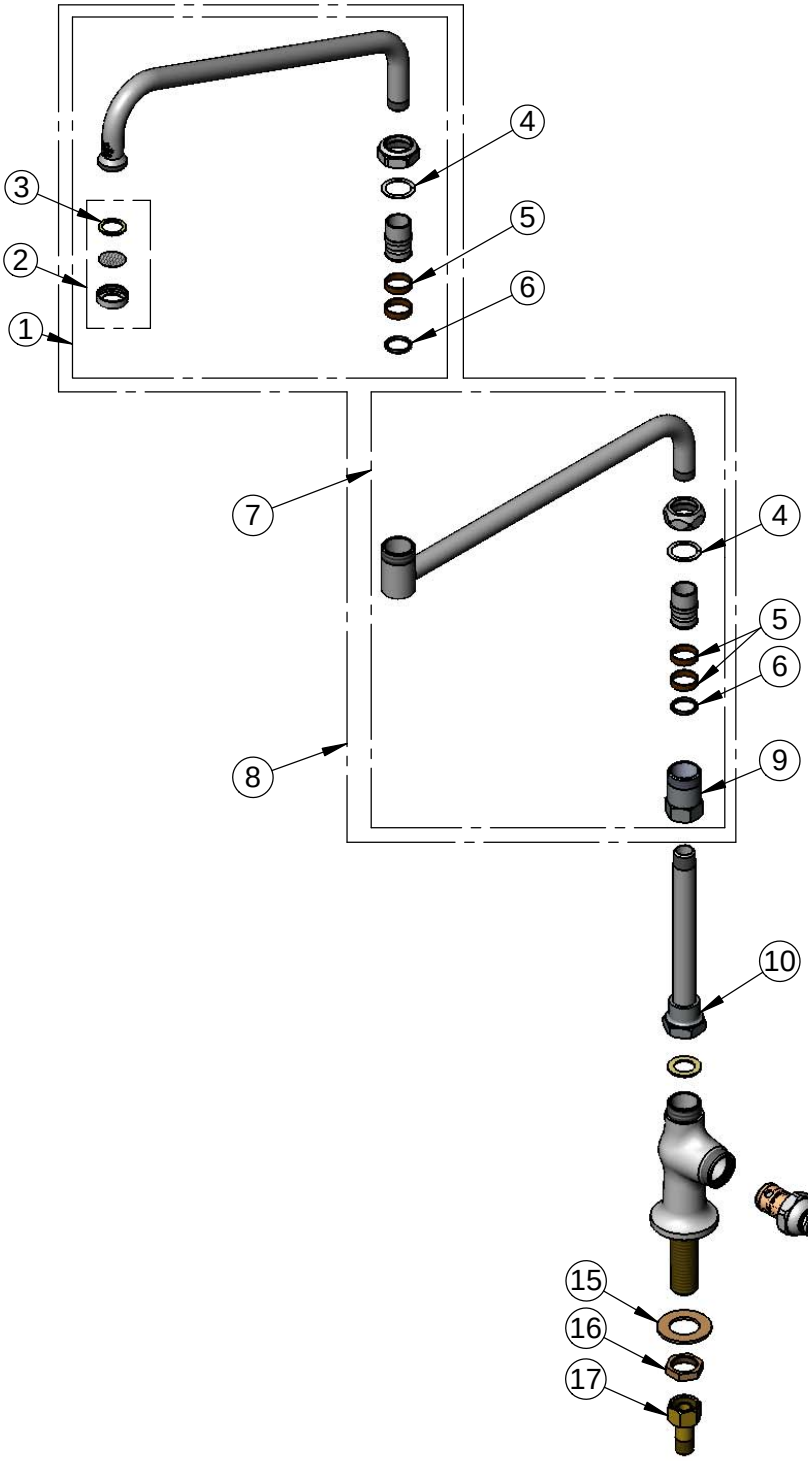


| ITEM NO. | SALES NO. | DESCRIPTION |
|---|---|---|
| 1 | 062X | B-0205 Faucet Body, Swivel |
| 2 | B-PT | Stream Regulator Outlet |
| 3 | 001048-45 | Nozzle Tip Washer |
| 4 | 009538-45 | Swivel Washer |
| 5 | 011429-45 | Swivel Sleeves (2) |
| 6 | 001074-45 | O-Ring |
| 7 | 002871-40 | Double Joint 12" Swing Nozzle Back Section |
| 8 | 017919-40 | 24" Double Joint Swing Nozzle w/ Stream Regulator Outlet |
| 9 | 054X | Swivel Body |
| 10 | B-1912-10 | 7 5/6" Staight Swivel Extension |
| 11 | 005960-40 | Eterna Cartridge, RTC |
| 12 | 001638-45 | Lever Handle |
| 13 | 001660-45 | Blue Index-CW |
| 14 | 000922-45 | Lever Handle Screw |
| 15 | 000999-45 | Brass Lock Washer |
| 16 | 002954-45 | Shank Lock Nut |
| 17 | 150A | 1/4" NPT Tailpiece & Nut |

Product Specifications:

Single Hole Single Temperature Deck Mount Faucet, Eterna Cartridge, Lever Handle, 24" Double Joint Swing Nozzle w/ Swivel Body & Stream Regulator Outlet, 7 5/8" Extension and 1/2" NPT Male Inlet

Product Compliance:

ASME A112.18.1 / CSA B125.1
NSF 61 - Section 9
NSF 372 (Low Lead Content)
ANSI A117.1 (ADA)

| Drawn: JBC | Checked: JRM | Approved: JHB | Date: 06/22/16 | Scale: NTS | Sheet: 2 of 2 |
|---|---|---|---|---|---|