T&S BRASS AND BRONZE WORKS, INC.

2 Saddleback Cove / P.O. Box 1088
Travelers Rest, SC 29690

Travelers Rest, SC: 800-476-4103 • Simi Valley, CA: 800-423-0150 • Fax: 864-834-3518 • www.tsbrass.com

Model No.

B-0301-01-QT

Item No.

ADA Compliant

This Space for Architect/Engineer Approval

Job Name_____Date_____

Model Specified_____ Quantity_____

Customer/Wholesaler_____

Contractor_____

Architect/Engineer_____

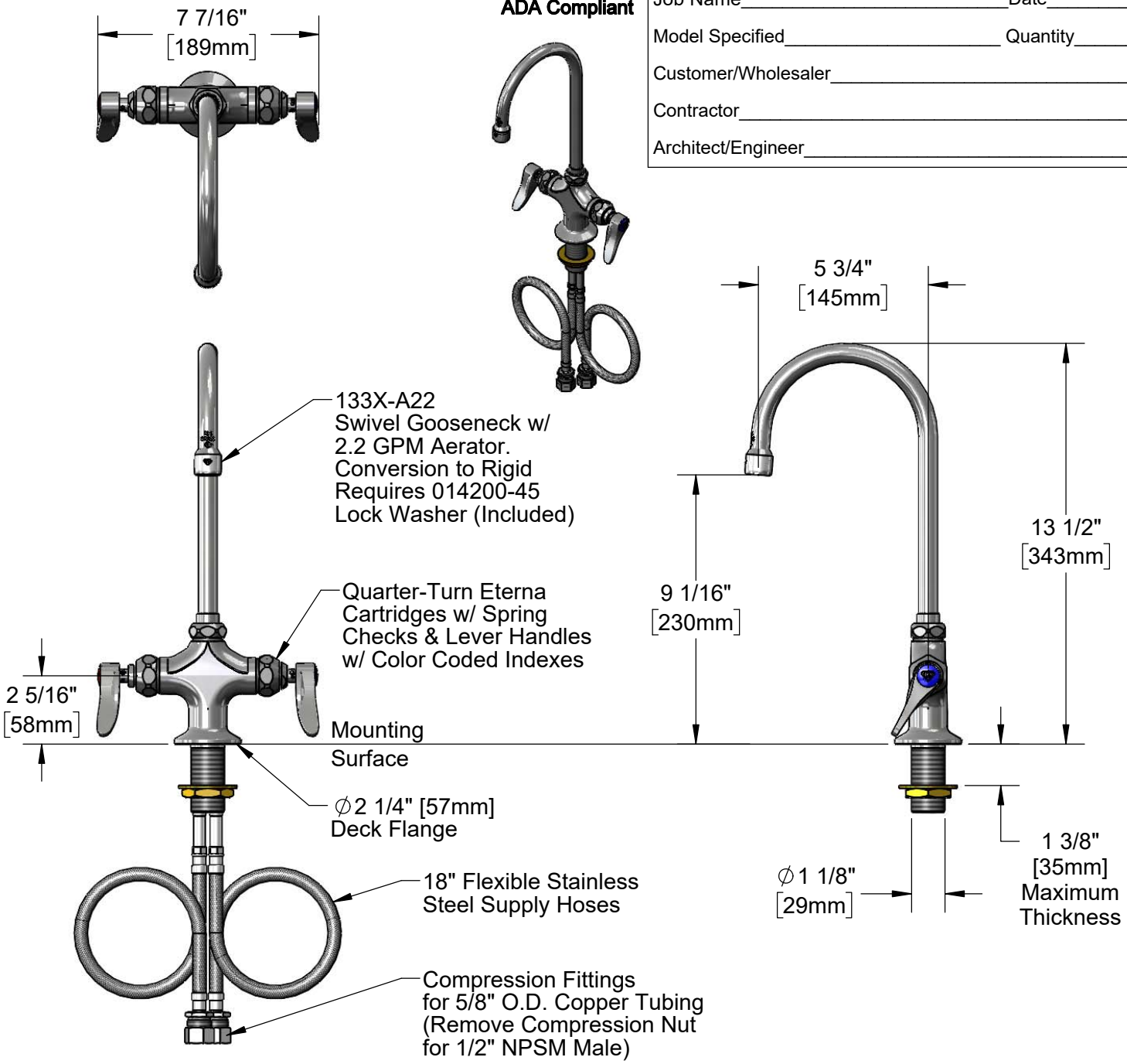

Rough-in Requirement:
∅1 1/2" [38mm] Mounting Hole

Product Specifications:

Single Hole Deck Mount Mixing Faucet, Quarter-Turn Eterna Cartridges w/ Spring Checks, Swivel/Rigid Gooseneck w/ 2.2 GPM Aerator, Lever Handles & 18" Flexible Stainless Steel Supply Hoses w/ 1/2" NPSM Male Inlets

Product Compliance:

ASME A112.18.1 / CSA B125.1
NSF 61 - Section 9
NSF 372 (Low Lead Content)
ANSI A117.1 (ADA)

Drawn: MRC	Checked: JRM	Approved: JHB	Date: 01/26/18	Scale: 1:5	Sheet: 1 of 2

T&S BRASS AND BRONZE WORKS, INC.

2 Saddleback Cove / P.O. Box 1088
Travelers Rest, SC 29690

Travelers Rest, SC: 800-476-4103 • Simi Valley, CA: 800-423-0150 • Fax: 864-834-3518 • www.tsbrass.com

Model No.

B-0301-01-QT

Item No.

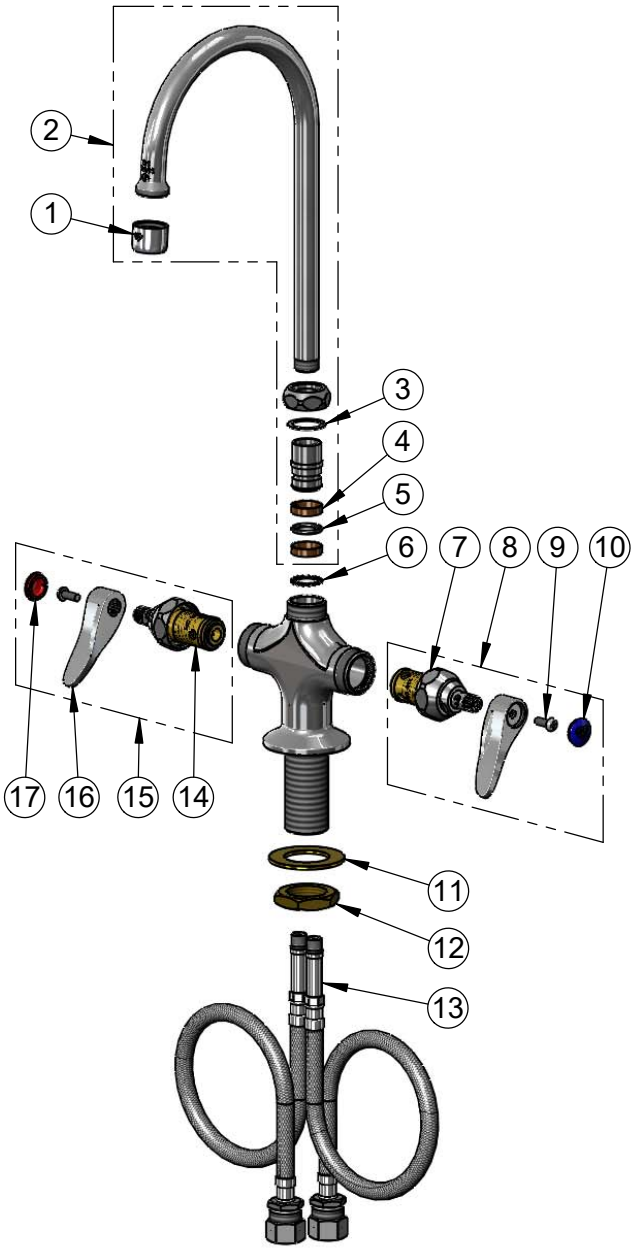

ITEM NO.	SALES NO.	DESCRIPTION
1	B-0199-01	2.2 GPM Aerator, 55/64"-27 UN Female
2	133X-A22	5 3/4" Swivel Gooseneck w/ 2.2 GPM Aerator
3	009538-45	Swivel Washer
4	011429-45	Swivel Sleeves (2)
5	001074-45	O-Ring
6	014200-45	Star Washer, Anti-Rotation
7	012442-40NS	Quarter-Turn Eterna Cartridge w/ Spring Check, LTC
8	002711-40NS	Quarter-Turn Eterna Cartridge w/ Spring Check, Handle, Blue Index & Screw, LTC
9	000925-45	Lab Handle Screw
10	018506-19NS	Blue Button Index, Press-in
11	002290-45	Lock Washer
12	000965-45	Lock Nut
13	012534-45	18" Flexible Supply Hose (2)
14	012443-40NS	Quarter-Turn Eterna Cartridge w/ Spring Check, RTC
15	002712-40NS	Quarter-Turn Eterna Cartridge w/ Spring Check, Handle, Red Index & Screw, RTC
16	001638-45NS	Lever Handle (New Style)
17	001193-19NS	Red Button Index, Press-in

Product Specifications:

Single Hole Deck Mount Mixing Faucet, Quarter-Turn Eterna Cartridges w/ Spring Checks, Swivel/Rigid Gooseneck w/ 2.2 GPM Aerator, Lever Handles & 18" Flexible Stainless Steel Supply Hoses w/ 1/2" NPSM Male Inlets

Product Compliance:

ASME A112.18.1 / CSA B125.1
NSF 61 - Section 9
NSF 372 (Low Lead Content)
ANSI A117.1 (ADA)

Drawn: MRC	Checked: JRM	Approved: JHB	Date: 01/26/18	Scale: NTS	Sheet: 2 of 2