T&S BRASS AND BRONZE WORKS, INC.

2 Saddleback Cove / P.O. Box 1088
Travelers Rest, SC 29690

Travelers Rest, SC: 800-476-4103 • Simi Valley, CA: 800-423-0150 • Fax: 864-834-3518 • www.tsbrass.com

Model No.
B-0230-132XA-EL

Item No.

ADA Compliant

This Space for Architect/Engineer Approval

Job Name_____Date_____

Model Specified_____ Quantity_____

Customer/Wholesaler_____

Contractor_____

Architect/Engineer_____

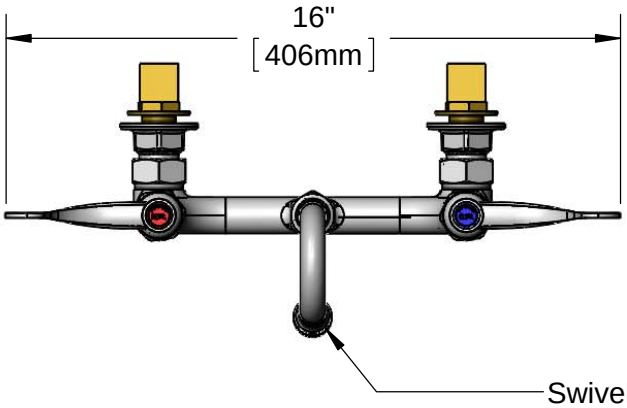

Swivel Gooseneck w/ B-0199-07 Vandal Resistant 2.2 GPM Aerator w/ Key. Rigid Conversion Requires 014200-45 Lock Washer (Included)

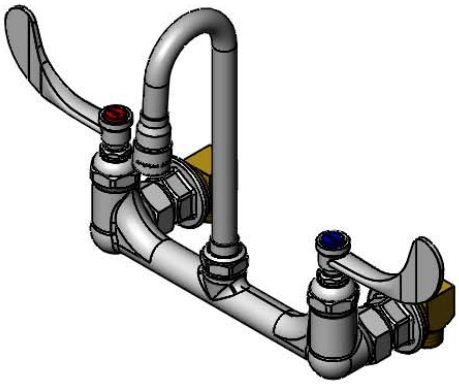

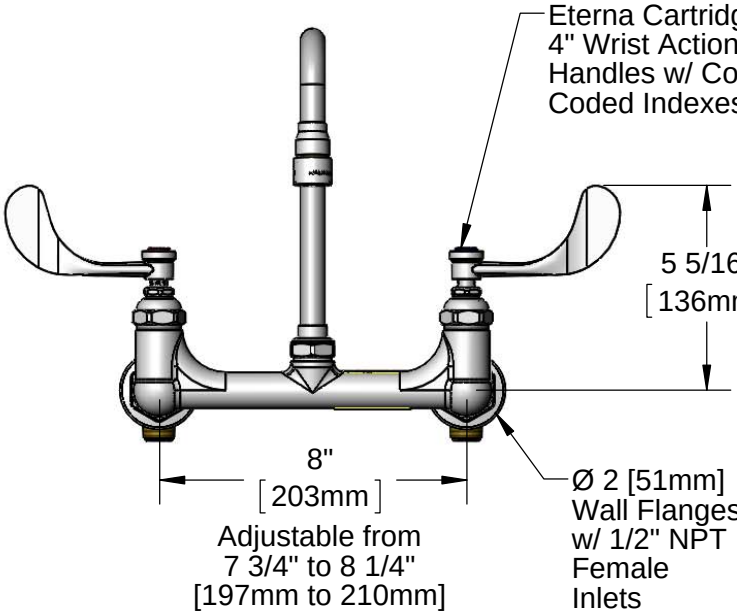

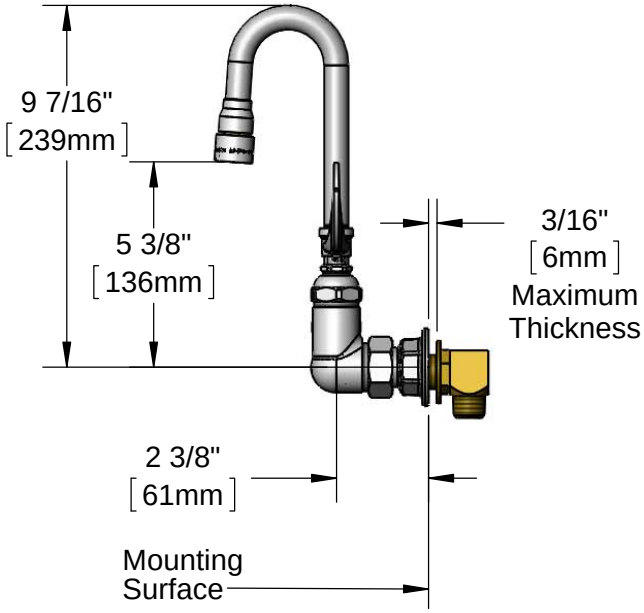

Product Specifications:

8" Wall Mount Mixing Faucet, Eterna Cartridges, 4" Wrist Action Handles, 2 5/8" Swing Nozzle w/ Vandal Resistant 2.2 GPM Aerator & Installation Kit w/ 1/2" NPT Male Inlets

Product Compliance:

ASME A112.18.1 / CSA B125.1
NSF 61 - Section 9
NSF 372 (Low Lead Content)
ANSI A117.1 (ADA)

Drawn: DHL	Checked: JRM	Approved: JHB	Date: 11/20/15	Scale: 1:5	Sheet: 1 of 2

T&S BRASS AND BRONZE WORKS, INC.

2 Saddleback Cove / P.O. Box 1088
Travelers Rest, SC 29690

Travelers Rest, SC: 800-476-4103 • Simi Valley, CA: 800-423-0150 • Fax: 864-834-3518 • www.tsbrass.com

Model No.

B-0230-132XA-EL

Item No.

ITEM NO.	SALES NO.	DESCRIPTION
1	B-0199-07	VR 2.2 GPM Aerator, 3/8" NPSM Male w/ Key
2	B-0199-06	VR 2.2 GPM Aerator, 55/64-27 UN Female w/ Key
3	044A	3/8" to Aerator Adapter
4	001043-45	Washer
5	009538-45	Swivel Washer
6	011429-45	Swivel Sleeves (2)
7	001074-45	O-Ring
8	014200-45	Star Washer, Anti-Rotation
9	001686-45	Blue Index - CW
10	000925-45	Lab Handle Screw
11	B-WH4C	4" Wrist Action Handle, Screw & Cold Index
12	B-0230-K	Short Elbow Installation Kit
13	002954-45	Shank Lock Nut
14	000999-45	Brass Lock Washer
15	013357-20	1/2" NPT x 1-5/8" Lg. Close Nipple
16	00AA	1/2" NPT Female Eccentric Flange
17	001019-45	Coupling Nut Washer
18	B-WH4	4" Wrist Action Handle
19	006009-40	Eterna Cartridge, LTC (Teflon)
20	006010-40	Eterna Cartridge, RTC (Teflon)
21	B-WH4H	4" Wrist Action Handle, Screw & Hot Index
22	001194-45	Red Index - HW

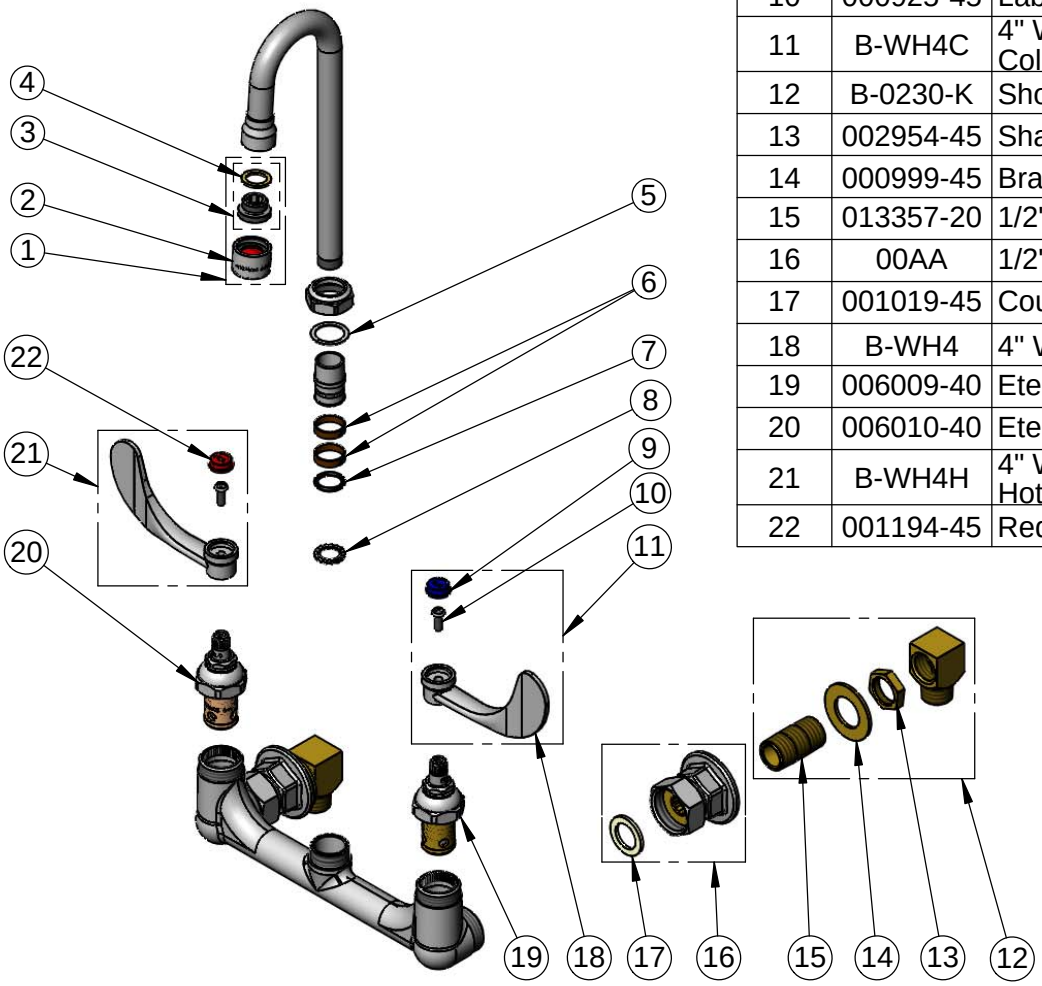

Product Specifications:

8" Wall Mount Mixing Faucet, Eterna Cartridges, 4" Wrist Action Handles, 2 5/8" Swing Nozzle w/ Vandal Resistant 2.2 GPM Aerator & Installation Kit w/ 1/2" NPT Male Inlets

Product Compliance:

ASME A112.18.1 / CSA B125.1
NSF 61 - Section 9
NSF 372 (Low Lead Content)
ANSI A117.1 (ADA)

Drawn: DHL	Checked: JRM	Approved: JHB	Date: 11/20/15	Scale: NTS	Sheet: 2 of 2